3463 Ridgeway
Residential Pool

Custom Soil Resource Report
Soil Map

Map Scale: 1:465 if printed on A landscape (11" x 8.5") sheet.

N

Meters: 0 5 10 20 30

Feet: 0 20 40 80 120

Map projection: Web Mercator Corner coordinates: WGS84 Edge tics: UTM Zone 17N WGS84

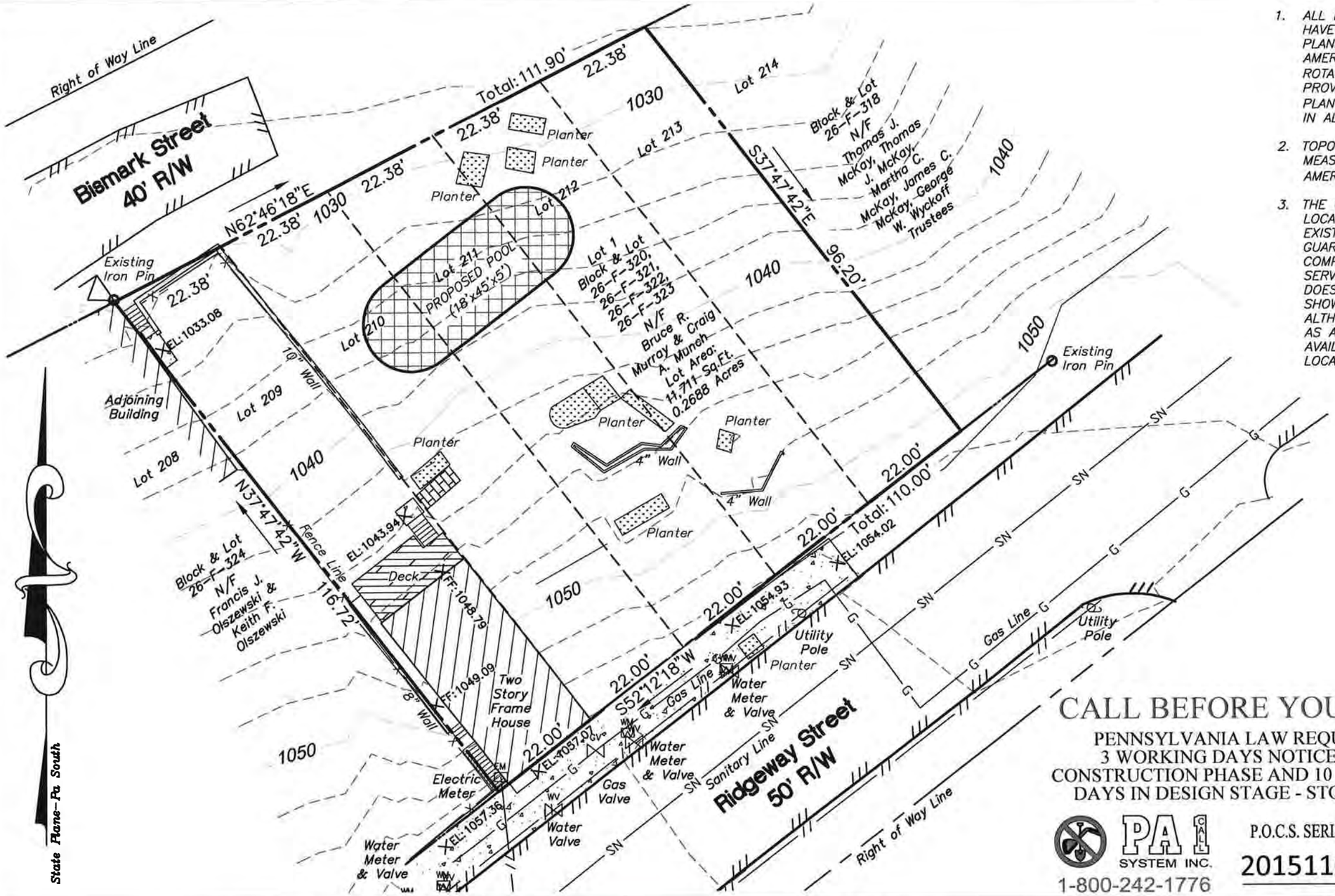

1. ALL DEEDS OR PLAN BEARINGS AND COORDINATES HAVE BEEN ROTATED AND CONVERTED TO PA STATE PLANE COORDINATE SYSTEM SOUTH ZONE, NORTH AMERICAN DATUM OF 1983. BEARINGS HAVE BEEN ROTATED 2°12'18" CLOCKWISE FROM THE BEARINGS PROVIDED ON THE RIDGEWAY STREET CONSOLIDATION PLAN OF LOTS, (P.B.VOL. 282, PAGE 184) RECORDED IN ALLEGHENY COUNTY DEPARTMENT OF REAL ESTATE.

2. TOPOGRAPHIC MAPPING IS BASED ON FIELD MEASUREMENTS. THE VERTICAL DATUM IS NORTH AMERICAN VERTICAL DATUM OF 1988 (NAVD88).

3. THE UNDERGROUND UTILITIES SHOWN HAVE BEEN LOCATED FROM FIELD SURVEY INFORMATION AND EXISTING DRAWINGS. THE SURVEYOR MAKES NO GUARANTEE THAT THE UNDERGROUND UTILITIES SHOWN COMPRISE ALL SUCH UTILITIES IN THE AREA, EITHER IN SERVICE OR ABANDONED. THE SURVEYOR FURTHER DOES NOT WARRANT THAT THE UNDERGROUND UTILITIES SHOWN ARE IN THE EXACT LOCATION INDICATED ALTHOUGH HE DOES CERTIFY THAT THEY ARE LOCATED AS ACCURATELY AS POSSIBLE FROM INFORMATION AVAILABLE. THE SURVEYOR HAS NOT PHYSICALLY LOCATED THE UNDERGROUND UTILITIES.

GRAPHIC SCALE

20 0 10 20

1 inch = 20 ft.

CALL BEFORE YOU DIG!

PENNSYLVANIA LAW REQUIRES 3 WORKING DAYS NOTICE FOR CONSTRUCTION PHASE AND 10 WORKING DAYS IN DESIGN STAGE - STOP CALL

PA 1 CALL SYSTEM INC.

1-800-242-1776

P.O.C.S. SERIAL NUMBER

20151103418

COMMONWEALTH OF PENNSYLVANIA
REGISTERED PROFESSIONAL
MARK B. SCHMIDT
LAND SURVEYOR
SU-36960-E

6/16/2015

☐ 123 RIDGE RD. SUITE B
VALENCIA, PA 16059

FAX: (724) 625-4544
PHONE: (724) 625-4549
WWW.HAMPTON-TECHNICAL.COM
E-MAIL: EMAIL@HAMPTON-TECHNICAL.COM

HAMPTON TECHNICAL ASSOCIATES, INC.
ENGINEERING LAND SURVEYORS
ESTABLISHED 1960

☒ ETNA TECHNICAL CENTER
35 WILSON STREET, #201
PITTSBURGH, PA 15223

FAX: (412) 781-5904
PHONE: (412) 781-9660
WWW.HAMPTON-TECHNICAL.COM
E-MAIL: EMAIL@HAMPTON-TECHNICAL.COM

CLIENT: Bruce R. Murray

PLAN: Lot 1: Ridgeway Street Consolidation Plan (PBV 282, Pg. 184)
Block & Lot: 26-F-320, 321, 322, & 323

LOCATION: 3463 Ridgeway Street, Pittsburgh, Pa, 15213
6th Ward-City of Pittsburgh, Allegheny County, Pa.

PROJ.#: 15-11759	DATE: 5-21-15	CAD FILE: 15-11759deed.dwg	SCALE: 1"=20'	DRAWN BY: RJF	CHECKED BY: MBS

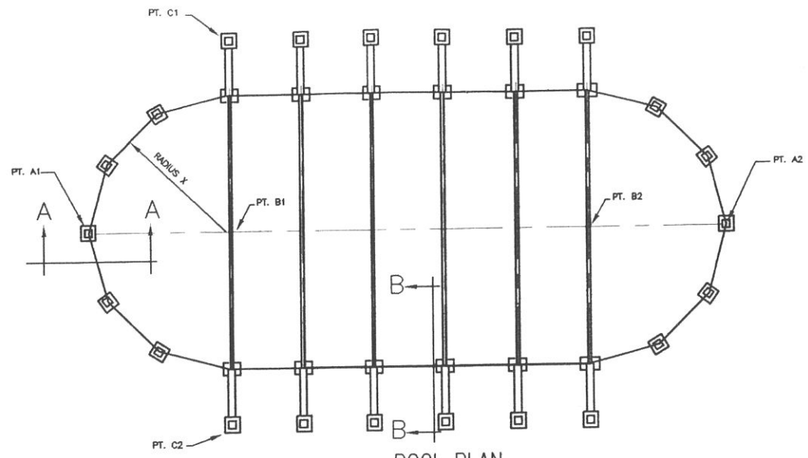

POOL PLAN

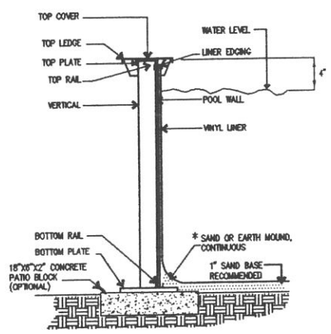

SECTION A-A (TYPICAL)

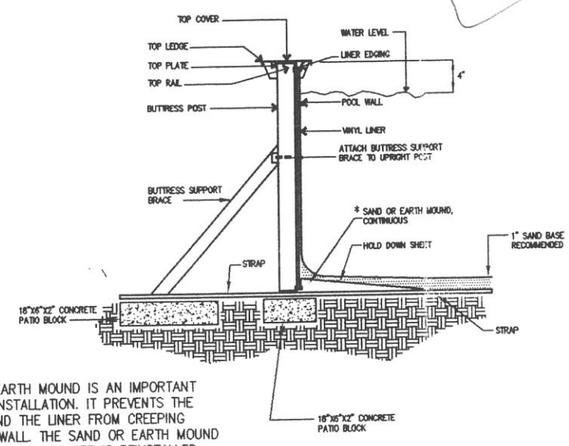

SECTION B-B (TYPICAL)

* NOTE: THE SAND OR EARTH MOUND IS AN IMPORTANT FEATURE OF THE POOL INSTALLATION. IT PREVENTS THE WALL FROM UPLIFTING AND THE LINER FROM CREEPING UNDERNEATH THE POOL WALL. THE SAND OR EARTH MOUND IS TO BE REBUILT EVERYTIME THE LINER IS REINSTALLED FOR ANY REASON.

TABULATED DATA

POOL SIZE	DISTANCE: PT.A1-PT.A2	DISTANCE: A1 TO B1 (ALSO RADIUS X)	DISTANCE: PT.B1-PT.B2	DISTANCE: PT.B1-PT.C1	DISTANCE: ACROSS POOL PT.C1-PT.C2	QUANTITY OF:	
						VERTICALS	BUTTRESSES
16 X 10	16'	5'	6'	8'	16'	8	6
18 X 12	18'	6'	6'	9'	18'	8	6
24 X 12	24'	6'	12'	9'	18'	8	10
24 X 15	24'	7' 6"	9'	10' 6"	21'	8	8
30 X 15	30'	7' 6"	15'	10' 6"	21'	8	12
33 X 18	33'	9'	15'	12'	24'	10	12
39 X 18	39'	9'	21'	12'	24'	10	16
45 X 18	45'	9'	27'	12'	24'	10	20

WALL HEIGHT	MAXIMUM WATER LEVEL
48 IN.	44 IN.
52 IN.	48 IN.

GENERAL NOTES:

1. DO NOT DIVE OR JUMP INTO YOUR POOL. YOUR POOL IS APPROXIMATELY 48" OR 4 FEET DEEP. IT IS NOT DESIGNED FOR DIVING OR JUMPING. IF YOU DIVE OR JUMP INTO THE POOL YOU RUN THE HIGH RISK OF PERMANENT INJURY OR DEATH. ALERT ALL VISITORS AND GUESTS OF THIS FACT. POINT OUT THE "DO NOT DIVE" LABELS SUPPLIED WITH THE POOL.
2. LOCATION OF POOL AND BARRIER REQUIREMENTS SHALL MEET ALL LOCAL AND NATIONAL CODES.
3. WATER SUPPLY AND DISPOSAL SHALL BE ARRANGED SO THERE ARE NO CROSS CONNECTIONS WITH ANY DOMESTIC WATER OR DISPOSAL SYSTEMS.
4. ALL ELECTRICAL WORK SHALL COMPLY WITH ALL REQUIRED LOCAL AND NATIONAL ELECTRICAL CODES. NO OVERHEAD ELECTRICAL WIRES SHALL PASS WITHIN 10 FEET OF THE POOL SIDES, NOR OVER THE POOL.
5. THIS DRAWING IS VALID ONLY WHEN SIGNED AND SEALED. IT IS THE PROPERTY OF THIS ENGINEERING OFFICE AND MAY NOT BE REPRODUCED WITHOUT WRITTEN CONSENT FROM THIS OFFICE.

SJ Morrison

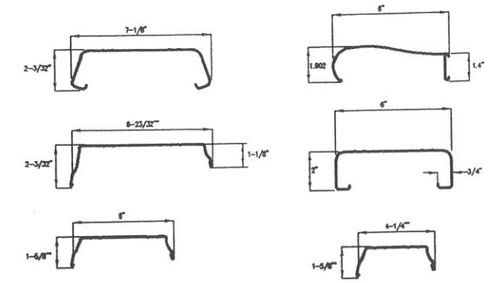

TOP LEDGES

TOP AND BOTTOM RAIL

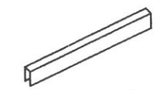

LINER EDGING

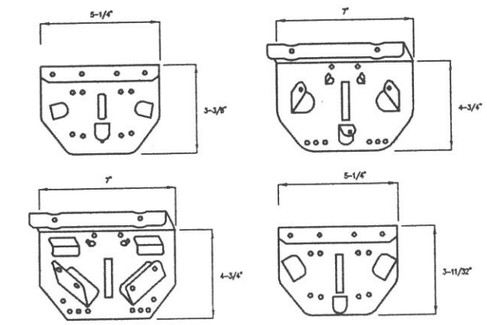

TOP AND BOTTOM PLATES

ONE PIECE

TWO PIECE

TOP COVERS

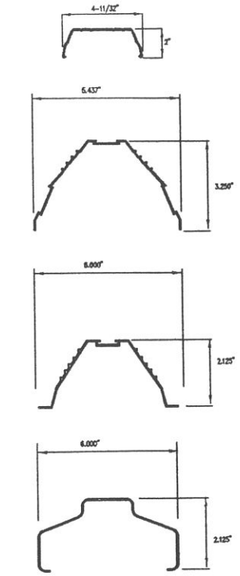

VERTICALS

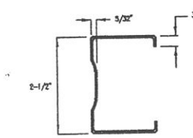

MATERIAL: STEEL HDG

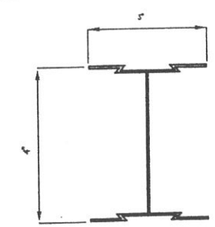

MATERIAL: ALUMINUM 6063-T5

BUTTRESS POSTS AND BRACES

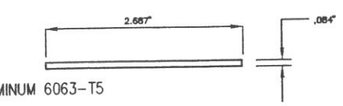

MATERIAL: ALUMINUM 6063-T5

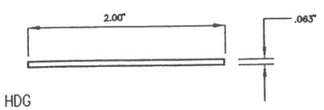

MATERIAL: STEEL HDG

STRAPS

REV.	DESCRIPTION	DATE:	BY:

SWIM 'N PLAY INC.
RAHWAY, NEW JERSEY
ABOVE GROUND OVAL POOLS

FUTURA CONSULTING
PROFESSIONAL ENGINEERS AND CONSULTANTS
13 CLYDE ROAD
SOMERSET, N.J. 08873

DRAWN BY: WEW	DATE: 12/3/94	
CHECKED BY: SJM	DATE: 12/8/94	
DRAWING NO. SNP-002V		REV. 0

May 26, 2015

Mr. Bruce Murray
3463 Ridgeway Street
Pittsburgh, PA 15213

Subject: Geotechnical Assessment
Proposed Pool Installation
3463 Ridgeway Street
City of Pittsburgh, Allegheny County, Pennsylvania

Dear Mr. Murray:

KU Resources, Inc. (KU Resources), is pleased to provide this report of our assessment of the geotechnical conditions of your property located at 3463 Ridgeway Street in the 6th ward of the City of Pittsburgh, Pennsylvania. This work was performed pursuant to a request from the City of Pittsburgh, as the property involved lies within a designated steep slope district of the city (>25% slopes).

It is our understanding that you plan on installing a swimming pool, generally 18 feet wide by 45 feet long. This will be positioned immediately to the northeast of the existing residence, with the long axis of the pool parallel with the contour of the slope. Installation of the pool will require creation of a level pad area that will include the pool and surrounding deck/patio area. For evaluation purposes, it is understood that this combined area will be no greater than 30 feet wide.

Topographic mapping performed by Hampton Technical Associates, Inc. has verified that the yard area meets the definition of a “steep” slope. In the pool area, the change in grade over a 30 foot span would be 8 feet (26.7%). Construction would consist of a 4-foot high cut slope on the uphill side of the pool area, as well as the construction of a 4-foot high embankment on the downslope side. If retaining structures are not utilized for aesthetic purposes, slopes should not exceed 2H:1V in configuration.

A Soil Resources Report from the Natural Resources Conservation Service (attached) indicates that the soils on the property are listed as Urban Land – Culleoka Complex, moderately steep. The Culleoka Complex is the native soil in the area, which is comprised of a fine-loamy residuum weathered from sandstone and siltstone. The Urban Land designation indicates that this soil has been modified and added to by human activity, and likely does not retain the properties of a Culleoka soil (a channery silt loam). Indeed, historical imagery from May 26, 1967 indicates the presence of residential structures on each of the former lots that comprise the pool area. Upon demolition, these foundations were likely backfilled with soils from an offsite location, as no Culleoka soil-based borrow areas would have been present on site. Therefore, we do not believe that the slope instability conditions of concern will be present onsite with the limited amount of earthwork required for the pool project.

Given the history of use of the property and the proposed limited construction, it is our belief that the site is suitable for installation of the pool. The shallow excavations proposed will be stable, and the embankment portion of the project should be constructed as an engineers (compacted) fill keyed properly into the underlying soils. During excavation, there may be remnants of the former use of the property as homes, which could include buried foundation walls, debris, etc. You may need to remove or work around any materials or conditions that could be deleterious to the installation of the pool. At the time of construction, I would be happy to inspect the conditions and advise you accordingly.

Limitations in the Use and Interpretations of this Geotechnical Report

KU Resources' professional services were performed, our findings obtained, and our recommendations prepared in accordance with generally accepted engineering principles and practices. This warranty is in lieu of all other warranties, either expressed or implied.

The geotechnical report was prepared for the use of the Owner in the design and development of the subject Site and should be made available to potential contractors and/or the Contractor for information on factual data only. This report should not be used for contractual purposes as a warranty of interpreted subsurface conditions such as those indicated by the interpretive boring and test pit logs, cross-sections, or discussion of subsurface conditions contained herein.

The analyses, conclusions, and recommendations contained in the report are based on Site conditions as they presently exist and assume that the exploratory borings, test pits, and/or probes are representative of the subsurface conditions of the site. If, during construction, subsurface conditions are found which are significantly different from those observed in the exploratory borings and test pits or assumed to exist in the excavations, we should be advised at once so that we can review these conditions and reconsider our recommendations, where necessary. If there is a substantial lapse of time between the submission of this report and the start of work at the site, or if conditions have changed due to natural causes or construction operations at or adjacent to the site, this report should be reviewed to determine the applicability of the conclusions and recommendations considering the changed conditions and time lapse.

The boring logs are our opinion of the subsurface conditions revealed by periodic sampling of the ground as the borings progressed. The soil descriptions and interfaces between strata are interpretive and actual changes may be gradual. The boring logs and related information depict subsurface conditions only at these specific locations and at the particular time designated on the logs. Soil conditions at other locations may differ from conditions occurring at these boring locations. Also, the passage of time may result in a change in the soil conditions at these boring locations.

Groundwater levels often vary seasonally. Groundwater levels reported on the boring logs or in the body of the report are factual data only for the dates shown.

Unanticipated soil conditions are commonly encountered on construction sites and cannot be fully anticipated by merely taking soil samples, borings, or test pits. Such unexpected conditions frequently require that additional expenditures be made to attain a properly constructed project. It is recommended that the Owner consider providing a contingency fund to accommodate such potential extra costs.

KU Resources cannot be responsible for any deviation from the intent of this report including, but not restricted to, any changes to the scheduled time of construction, the nature of the project or the specific construction methods or means indicated in this report; nor can our firm be responsible for any construction activity on sites other than the specific Site referred to in this report.

If you have any questions regarding the contents of this evaluation, please contact our office at your earliest convenience.

Respectfully submitted,

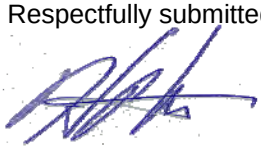

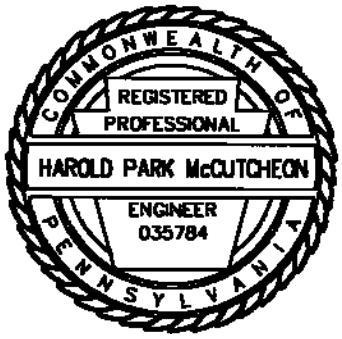

Harold P. McCutcheon, P.E.
Chief Engineer

HPM:cak