GEOTECHNICAL INVESTIGATION
VILLAS AT WINTER PARK
CITY OF PITTSBURGH, ALLEGHENY COUNTY, PENNSYLVANIA

Prepared for:

SYNERGY CAPITAL, INC.
1014 PERRY HIGHWAY, SUITE 100
PITTSBURGH, PENNSYLVANIA 15237

JANUARY 2015
REVISED MARCH 2016

KU Resources, Inc.
Innovative Solutions. Outstanding Support.

22 South Linden Street | Duquesne, PA 15110
412.469.9331 | 412.469.9336 fax
www.kuresources.com

GEOTECHNICAL INVESTIGATION
VILLAS AT WINTER PARK
CITY OF PITTSBURGH, ALLEGHENY COUNTY, PENNSYLVANIA

Prepared for:
SYNERGY CAPITAL, INC.
1014 PERRY HIGHWAY, SUITE 100
PITTSBURGH, PENNSYLVANIA 15237

Prepared by:
KU RESOURCES, INC.
22 SOUTH LINDEN STREET
DUQUESNE, PENNSYLVANIA 15110

JANUARY 2015
REVISED MARCH 2016

TABLE OF CONTENTS

1.0 INTRODUCTION 1

2.0 SUMMARY OF WORK PERFORMED 2

2.1 Subsurface Investigation 2
2.2 Soil Boring Location Summary 2
2.3 Site Survey 2

3.0 SITE GEOLOGY AND SOIL CONDITIONS 3

3.1 Site Geology 3
3.2 Soils and Unconsolidated Materials 4
3.3 Coal Mining 4
3.4 Site Hydrogeology 4
3.5 Site Soil Conditions 4
3.5.1 General Residual Soil and Rock Conditions 4
3.5.2 Landslide Prone Soils 5

4.0 CONCLUSIONS AND RECOMMENDATIONS 6

4.1 General Site Conditions 6
4.1.1 Soil and Rock Conditions 6
4.1.2 Groundwater Conditions 6
4.1.3 Corrosion Testing 6
4.2 Recommendations 7
4.2.1 Material Compaction 7
4.2.1.1 Over-excavation 7
4.2.1.2 General Fill Placement Requirements 7
4.2.2 Slope Construction and Retaining Walls 8
4.2.3 Foundation Design – Spread Footing Foundations 9
4.2.4 Pavement Design 9
4.3 Summary 9
4.4 Limitations 10

5.0 RETAINING WALL ASSESSMENT 11

FIGURES

Figure 1 Site Location Map
Figure 2 Boring Locations Map
Figure 3 General Embankment Keyway Arrangement

APPENDICES

Appendix A Boring Logs
Appendix B Soil Survey
Appendix C Retaining Wall Calculations

1.0 INTRODUCTION

This geotechnical investigation was performed for Synergy capital, Inc. to acquire subsurface information for the residential development to be known as the Villas at Winter Park in the South Side Slopes section of the City of Pittsburgh, Allegheny County, Pennsylvania (the site). This geotechnical investigation was conducted in accordance with our Proposal for Geotechnical Investigation. The Site Location map is presented in Figure 1.

The site is an undeveloped section of land situated south of Pius Street in this section of the city. The Site is a natural slope above the floodplain of the Monongahela River that forms the South Side section of the City. Development will require extensive cutting and filling of the existing subsurface to achieve the planned grades. Proposed construction for the site will consist of 14 single-family residential units along with the extension of two existing city streets.

The drilling program performed at the site, as described in this report, was intended to determine the nature of the soil strata at the site; and when bedrock conditions were encountered, the depth, competency, and consistency of the strata. The following sections provide the results of our investigation in greater detail, along with recommendations related to the management and utilization of soils and rock at the site.

2.0 SUMMARY OF WORK PERFORMED

2.1 Subsurface Investigation

Ten soil borings (designated GB-1 through GB-10) were advanced by Terra Testing, Inc. at the site on December 17, 2014 through December 19, 2014. The boring locations are presented in Figure 2. Prior to initiating drilling activities, the Pennsylvania One Call System underground utility locating service was contacted to identify any possible conflicts with the drilling program. The Pennsylvania One Call System contacted affected utility providers, and underground utility lines were marked.

The borings were advanced using continuous split-spoon sampling equipment and hollow-stem augers. Borings were advanced to depths ranging from approximately 10 to 25 ft below ground surface (bgs). Standard Penetration Tests (SPT) were performed by using a 140-pound hammer dropping 30 inches to drive the split-spoon sampler 18 inches into the soil. Hammer blows are recorded for each 6-inch interval. SPT tests can provide an estimate of relative density of cohesionless soils and an estimate of bearing strength and consistency of cohesive soils. The SPT results are presented on the Soil Boring Logs (see Appendix A).

All soil boring activities were observed by a KU Resources field engineer with experience observing similar projects. Soil samples were visually examined and boring logs were created for each boring. Soil boring locations were generally set based upon visual observations of existing site features and topography. The boring logs are presented in Appendix A.

2.2 Soil Boring Location Summary

Borings GB-1 through GB-6 were advanced on the western portion of the property, reflecting the development activities that will be associated with the extension of Hackstown Street, Borings B-7 through B-10 were positioned on the eastern side of the Site, for the proposed extension of Magdalene Street and the units positioned near Gregory Street.

2.3 Site Survey

The ground surface at each boring location advanced was approximated based upon the survey mapping of the site prepared by Deglau Surveying prior to drilling activities by KU Resources' personnel.

3.0 SITE GEOLOGY AND SOIL CONDITIONS

Figure 1 presents the location of the Site on the Pittsburgh East, Pennsylvania U.S. Geological Survey (USGS) 7.5-minute topographic map. The elevation of the Site ranges from approximately 900 to 975 feet above mean sea level.

3.1 Site Geology

The Site is located in the Pittsburgh Low Plateau Section of the Appalachian Plateaus Physiographic Province. The topography of this area is bedrock controlled and represents the most complexly dissected portion of the Allegheny Peneplain, characterized by rounded hills and steep-sided valleys formed by stream erosion of a former plain-like area, Upland flat areas are rare and usually small. The surface topography of the Site reflects this regional description. The Site topography can be described as a portion the slope rising from the Monongahela River floodplain. The central portion of the Site is a relatively level bench, with slopes on either side.

Bedrock directly below the unconsolidated materials on the subject property is composed of unmetamorphosed Paleozoic sedimentary rocks from the upper section of the Casselman Formation of the Conemaugh Group. Various distinct bedrock lithologies are present within the Conemaugh Group and are composed of cyclic sequences of shale, siltstone, sandstone, limestone, and thin non-productive coal beds. The boundaries of the Casselman formation is marked stratigraphically on the upper end by the Pittsburgh Coal and on the lower end by the Ames Limestone. Due to changes in depositional environments, lithologic variations occur rapidly both laterally and vertically within these rock units.

Based on the results of the soil boring program, several rock types present on the site include red/grey claystones, often locally referred to as "red beds." The red beds (common to the Conemaugh Formation) are a series of mostly reddish, greenish, and grayish claystones and shales that tend to weather deeply where they occur on hillsides throughout large portions of western Pennsylvania. Based on the Site's relation to the mapped Pittsburgh Coal unit, the redbeds encountered during drilling may belong to the Clarksburg claystones (redbeds). Claystones have considerable pore space; however, the pores are not well connected (i.e., low permeability), causing water to be trapped in the rock. The trapped water can cause excessive pore-water pressure that leads to reduced shear strength internally. In addition, many claystones contain minerals that expand in the presence of water that also results in a loss of strength. Consequently, many of the slope failures recognized in the region are located in areas where the red beds are present. According to the USGS publication, "Map of Susceptibility to Landsliding, Allegheny County, Pennsylvania" (Pomeroy & Davies, 1975), the steep slope of the Site may be susceptible to earth movement. This designation Is based on the steepness of the slope, dip of underlying bedrock, and bedrock types. No landslides have been mapped on the Site in this study.

The bedrock in the area surrounding the subject property is folded, producing dips to the bedrock. Folds may take several forms, including that of "anticlines" (inverted U-shaped structures)," synclines" (U-shaped structures), or domes, Depending on the structure involved, bedrock typically dips toward (synclines) or away (anticlines) from the axis of the fold. According to geologic maps, the Site is located

immediately west of the McMurry Syncline. Bedrock beneath the Site likely dips southeast toward the syncline axis, although this dip direction represents a general trend - variations and even reversals may be present.

3.2 Soils and Unconsolidated Materials

According to the U.S. Department of Agriculture, Natural Resources Conservation Service, the sole soil type present on the site is Urban Land — Culleoka Complex. The Culleoka soils area channery silty loam derived from the weathering of the parent siltstone, fine-grained sandstone, and shale underlying the site. The Urban designation indicates that the field investigation team associated extensive human transposition of these materials or other fill materials brought to the site that have altered this natural formation.

For a brief description of these soils, see the USDA Soil Resource Report for the site (included as Appendix B).

3.3 Coal Mining

According to the Coal Resources of Allegheny County, Pennsylvania, the Pittsburgh Coal has been extensively mined in the area upslope of the Site, but not beneath the Site itself since it is located stratigraphically below this coal seam.

3.4 Site Hydrogeology

During the geotechnical investigation, groundwater was generally not encountered in either the unconsolidated material, or the weathered bedrock, except for a localized zone noted in boring GB-8 from approximately 16.5 to 18 feet below ground surface.

3.5 Site Soil Conditions

3.5.1 General Residual Soil and Rock Conditions

Based upon the NRCS description, it was anticipated that extensive filling or material management has historically occurred at the Site. A review of aerial photographs dating from the 1930s to the present indicate that no development activities have occurred on the property. Historically, the site has had significantly less wooded vegetation than is currently present, which may have included mowed lawn areas and sloping fields. Any remnant of this historical land usage and condition has been obliterated by the current dense vegetative growth.

The soils at the site are predominantly of a silty clay to clay composition, varying in color from dark brown to red to gray. The soil strata forms a thin veneer over the underlying bedrock, typically no greater than 5 feet in thickness above the highly weathered bedrock of the underlying formations. The weathered transition strata is approximately 8 to 10 feet thick before becoming more competent. All materials appears to be suitable for reuse on site.

3.5.2 Landslide Prone Soils

Isolated pockets of red clays and shales were observed in several of the soil borings. When encountered, these soil types can be excavated and mixed with other site soils to provide suitable fill materials in non-slope areas. Where the red shale remain exposed following construction activities, additional surface treatment may be necessary to reduce the rate of weathering that typically is associated with these formations.

4.0 CONCLUSIONS AND RECOMMENDATIONS

4.1 General Site Conditions

4.1.1 Soil and Rock Conditions

The soils and rock encountered throughout the site are suitable for reuse on site as a compacted fill. These materials will provide a suitable source of fill at the site, and should be stable for slope construction at slopes as steep as 2H:1V. As with all slopes, water infiltration should be minimized in these areas to reduce the potential for instability.

The rock strata at the site will also provide a good source of construction materials. The geotechnical investigation indicates that this material is friable, and can be easily excavated and ripped using standard construction equipment. This weathered rock should compact well and create a suitable fill.

In areas where high clay content/landslide prone soils are present or are observed during the earthwork activities, these soils need to be over-excavated and mixed with other site soils to form a suitable fill material. If the material is not blended, it should not be utilized beneath proposed structures or to construct fill slopes. Any cut slopes should be no steeper than 2H:1V, unless some form of an engineered retaining structure is utilized (see Section 5.0). These cut slopes will initially present themselves as very stable, but weathering and water infiltration on the exposed surfaces will reduce the inherent strength of the material, mandating these flatter slopes. Measures should also be undertaken to direct water away from these slopes, and collect and convey any identified springs or groundwater away from the area.

In addition to the slope issues, foundations set into this soil type should be given additional consideration. The foundation walls should not be backfilled with the red clays, as these apply additional lateral pressure against the structure when they get wet and can lead to wall collapse or other foundation failures. These should be backfilled with aggregate and/or other soils types, as construction dictates.

4.1.2 Groundwater Conditions

Groundwater was not encountered during the drilling activities. It appears that any groundwater, when encountered, will flow along this interface in relationship to the topography. During earthwork activities, springs and zones of seepage could be encountered in the cut slopes that might need to be addressed with localized drains.

Groundwater levels fluctuate seasonally and are dependent on the amount of precipitation. Seepage of groundwater into foundation excavations is considered unlikely. If groundwater is encountered, it should be pumped from the excavations, and appropriate permanent dewatering systems (French drains, sump pumps, etc.) installed, as necessary, to protect the structures and reduce the deleterious effects on the soil. No foundations are to be placed on overly saturated subgrades.

4.1.3 Corrosion Testing

Corrosion testing will be required in any areas proposed to have buried concrete or steel. Any material utilized for structural fill in these areas will require a corrosion testing suite of pH, resistivity, sulfate, and chloride content

to determine if concrete and buried steel requires corrosion protection.

4.2 Recommendations

4.2.1 Material Compaction

4.2.1.1 Over-excavation

The topsoil layer encountered during the drilling program should be stripped, stockpiled in an appropriate area, and replaced as appropriate after the earthwork activities are completed to promote the reestablishment of vegetation.

Over-excavation of the soils at the site to provide a suitable subbase for earthwork construction is not anticipated to be an extensive activity. In many areas of the site, the grading plan will likely require the removal of the soils plus underlying weathered bedrock to achieve the design elevations. This will rework any potential deleterious conditions that may be present. In areas not undergoing this level of earthwork, isolated over-excavation prior to fill placement may be required. Any areas containing the red beds may require over-excavation of soft zones and recompaction, depending upon final site grading and development plans which may require earthwork within the red bed zones. If red bed areas are planned for over-excavation, the Engineer must approve the over-excavation and management of the soils.

4.2.1.2 General Fill Placement Requirements

Where possible, structural fill should consist of material with USCS classifications of GP, GW, GM, GC, SP, SW, SM, or SC. Soils with classifications of ML and CL are sensitive to moisture but may be suitable for use as structural fill on a site-specific basis. All structural fill placed on site must be approved by the Engineer. No organics, coal, or carbonaceous shale shall be in the structural fill. Imported structural fill and on-site rock excavation should be free of particles greater than 6 inches in diameter (after compaction).

In areas that are designated for utility trenches or areas where unstable subgrades are encountered, imported granular structural fill should be utilized. The granular fill should be PennDOT 2A or an Engineer-approved equivalent. Compaction of the material will be done with a vibratory compacter until visual non-movement (Engineer approved) is achieved.

General fill placement requirements are as follows:

- Place structural fill at a minimum of 95% compaction of maximum dry density (MDD) and at moisture contents within 2% of optimum moisture content (OMC) based on a modified proctor test (ASTM D-1557).
- Place structural fill in horizontal lifts with a maximum thickness of 12 inches.
- Compact structural fill with a vibratory rolling or sheepsfoot compactor.
- Check density and moisture content of each lift with a nuclear density gauge (Troxler) to ensure compaction and moisture specifications are acceptable.

- Material that is wetter than 2% of OMC is to be allowed to dry prior to compaction.
- Material not meeting density specification is to be recompacted until the specification is attained.
- Place all structural fill on Engineer-approved subgrades.
- Any granular fill placed on site is to be compacted to visual non-movement with a vibratory compactor and Engineer approved.

4.2.2 Slope Construction and Retaining Walls

Based on a review of the revised site plans, 2H:1V slopes are proposed at the site along with the installation of engineered retaining walls. The materials encountered during the drilling program are conducive to the creation of slopes at this grade, and structural support provided by standard wall systems. The following paragraphs, along with the information provided in Section 5.0, highlight the elements to be addressed when working in these areas.

Fill slopes in combination with a retaining wall are proposed as part of the construction of Hackstown Street Extension. The fill material utilized for construction of the embankment must be keyed into the underlying soil and bedrock following the general requirements depicted on Figure 3. The exact location of benching and drain installation should be reviewed with the Engineer prior to implementation in the field, and inspected by the Engineer on an as-needed basis.

Likewise, a fill embankment (without a retaining structure) is proposed for most of the Magdalene Street extension. This to needs to be treated the same as any embankment fill on the property, following the general requirements.

Development of the residential building pads along Hackstown Street Extension involves cutting into the natural topography. The slope between the residences with be a 3H:1V slope, with a rear retaining wall varying between 3 and 6 feet in height. At the hammer-head end of the street, the support wall will be 5 foot in height.

For the residences along Magdalene Street Extension, the plan calls for terraced 10 foot high/3-4 foot high retaining walls with a 2H:1V cut slope on top to permit development of the building pads. This wall system will taper to a minimal height between the terminuses of Hackstown and Magdalene.

The final wall section being proposed is behind the residences along Gregory Street. A wall system ranging from 6 to 8 feet in height will need to be installed behind the lots.

As a general note, cut slopes that are proposed on top of or into the red bed area at the upper topographic regions should be further evaluated once they are exposed. In general, these cut surfaces will be subject to weathering and deterioration over time, and should be as flat as the development of the site permits. Where grading the site might dictate a steep slope (greater than 3H:1V), a detailed analysis of the site conditions may be required.

4.2.3 Foundation Design – Spread Footing Foundations

Spread footings can be utilized to support the proposed buildings on the site. The footings are to be placed on residual soil, recompacted fill, or on compacted structural fill. Maximum allowable bearing pressure for foundations constructed on soil or fill, according to the recommendation, is 2,000 psf. Foundations constructed on the weathered bedrock, which appears to the predominate condition, can utilize a maximum allowable bearing pressure of 4,000 psf. No footing should be designed to span a rock/soil horizontal interface — the section within the soil strata should be taken to an appropriate depth where uniform bearing pressures can be achieved.

Frost penetration depth is 36 inches below the lowest exterior finished grade for design. All spread footing is to be extended (at a minimum) to the frost depth. Spread footing foundations will have estimated total post-construction settlements of 1 inch or less and differential settlements of 0.5 inch or less.

4.2.4 Pavement Design

Remove existing site soils to a minimum depth or 18 inches below the base to the pavement section. Recompact structural fill under the pavement in accordance with compaction specifications presented in Sections 4.2.1.2 of this report. Proof-roll the pavement subgrades prior to the placement of structural fill or pavement. If the subgrade is unstable, backfill a minimum 12-inch thick layer of granular fill.

Use material with a minimum California Bearing Ratio (CBR) of 5 for the design of asphalt pavements. Design concrete pavements using a Modulus of Subgrade Reaction of 250 pounds per cubic inch. If other design values have been utilized for other portions of the development, they can be utilized herein for consistency.

4.3 Summary

A summary of our observations during the geotechnical investigation is detailed below.

- Bedrock was encountered at shallow depths at the site. The bedrock is composed of shale and sandstone. All of the bedrock encountered had some degree of weathering and was friable. The bedrock was not of the type to be typically rock cored. Upon split-spoon sampler refusal, all of the borings were augered to the target depth which indicates that the bedrock present at the site will be rippable using standard construction equipment.

- Dusky red clay and clayey shale were observed in several of the soil borings. The red clays and shales in the region are typically susceptible to stability concerns and will require additional analysis to determine the applicable remediation or development constraints after the final grading plans are developed.

Based upon the results of the geotechnical investigation activities, KU Resources recommends that spread footings be utilized for the construction, as most construction is proposed in areas where suitable soil exists or earthwork construction results in stable building pads. The extent of settlement issues will be limited to those commonly occurring in new construction in most areas of western Pennsylvania in areas

where the red beds are not present. House construction on residual red bed soil formations should not be performed, due to the unstable nature of these soils. If warranted, these soils should be over-excavated and replaced with suitable soils prior to construction.

4.4 Limitations

This report has been prepared in accordance with generally accepted soil and foundation engineering practices for the use of Meritage and their design consultants for design purposes. No other warranty, expressed or implied, is made as to the professional advice included in this report. In the event that conclusions or recommendations are made by others based upon the data and information provided in this report, such conclusions or recommendations are the responsibility of others.

The interpretations, conclusions, and recommendations submitted in this report are based upon the data obtained at the test boring locations and other points of intrusive investigation. This report does not reflect any variations which may occur between the test borings and points of investigation. The nature and extent of variations between the test borings may not become evident until excavation and earthwork is performed at the site. If, during construction, soil, rock, and groundwater conditions appear to be different from those described herein, KU Resources should be immediately advised so that a re-evaluation of the recommendations may be addressed.

5.0 RETAINING WALL ASSESSMENT

As previously indicated, retaining walls are required to support cut slopes in areas where residences are proposed, and to support embankment fills where roadways are to be constructed. The purpose of these walls is two-fold: 1) accommodate the height variations across the developed areas of the site to minimize the overall area of disturbance, and 2) support the soil and rock conditions identified in this report where excavation is required. This section provides a preliminary assessment of the stability of these wall installations.

There are a combination of wall configurations proposed for the site:

- A 10-foot high wall terraced with a 3-foot high wall in the parking area at the Hackstown Street Extension;
- A wall behind the residences and the hammer-head along Hackstown Street Extension supporting the natural grade above, ranging from 3 to 6 feet in height;
- A wall supporting the embankment of Hackstown Street Extension supporting the natural grade above, ranging from 3 to 8 feet in height;
- A terraced wall behind the residences of Magdalene Street Extension, with a 2H:1V cut slope transitioning into the natural grade above, with a base wall 10 feet in height and an upper wall ranging from 3 to 4 feet in height; and,
- A wall behind the residence of Lot 12 on Gregory Street, up to 8 feet high into the natural slope.

The site configuration and the allowable limits of disturbance will permit the use of a segmented masonry block wall system for this project, such as a Keystone Wall® product. The various configurations identified above have been evaluated using the proprietary Keywall modeling software to evaluate the required geogrid products and overall stability of the arrangements. The output from the program for each of the analyses is presented in Appendix C.

FIGURES

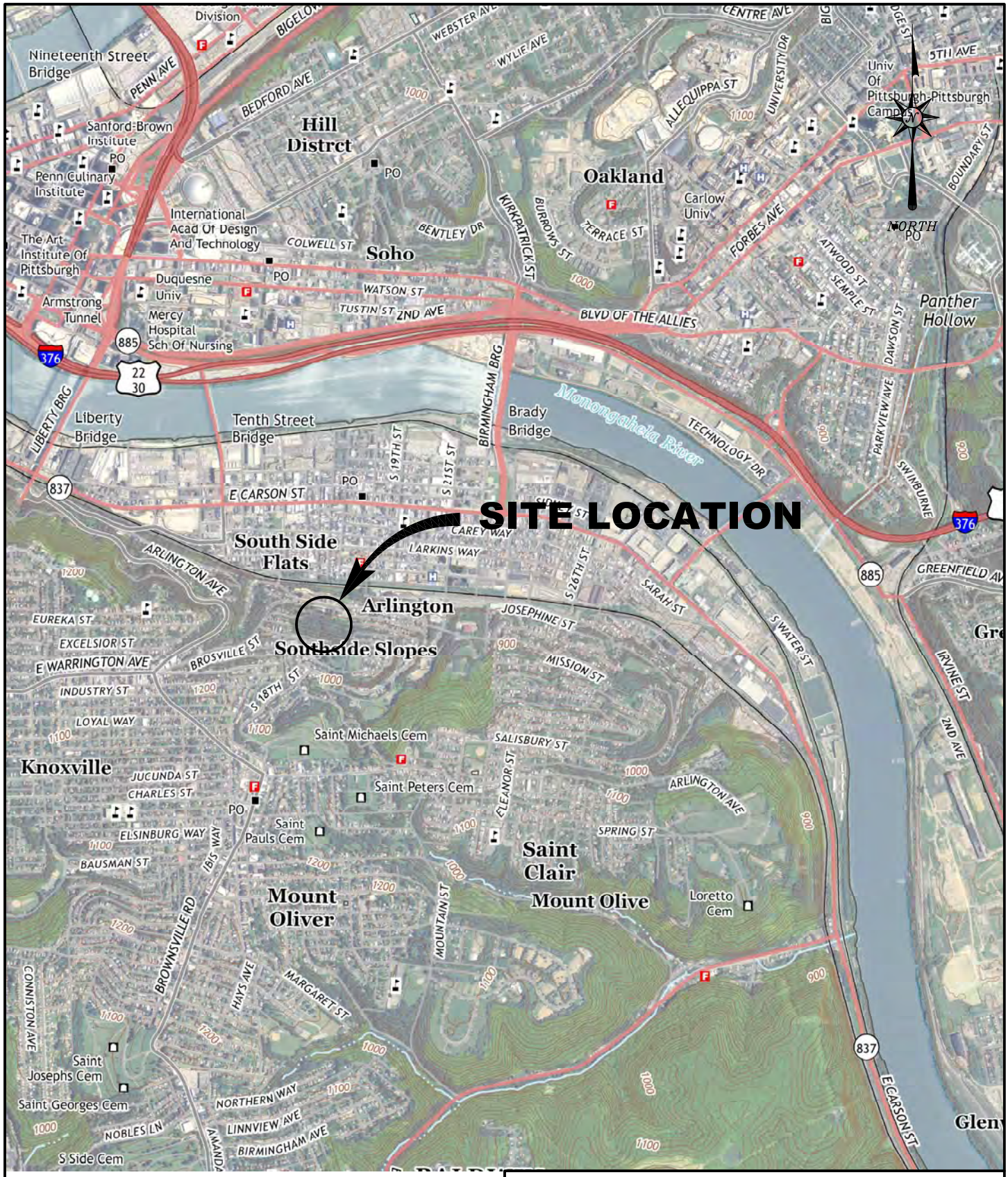

REFERENCE:
USGS 7.5–MIN TOPOGRAPHIC QUADRANGLE PITTSBURGH EAST, PENNSYLVANIA, DATED 2013.

SCALE – FEET
0 2000

APPROVED	HPM	01/16/2015
CHECKED	HPM	01/16/2015
DRAWN	RAM	01/16/2015
CAD FILE NO.		14438A001
PROJECT NO.		SCI.14438.GEO

KU Resources, Inc.
22 South Linden Street
Duquesne, PA 15110
412.469.9331
412.469.9336 fax
www.kuresources.com

FIGURE 1

SITE LOCATION MAP
VILLAS AT WINTER PARK

CITY OF PITTSBURGH
ALLEGHENY COUNTY, PENNSYLVANIA

PREPARED FOR
SYNERGY CAPITAL, INC.
PITTSBURGH, PENNSYLVANIA

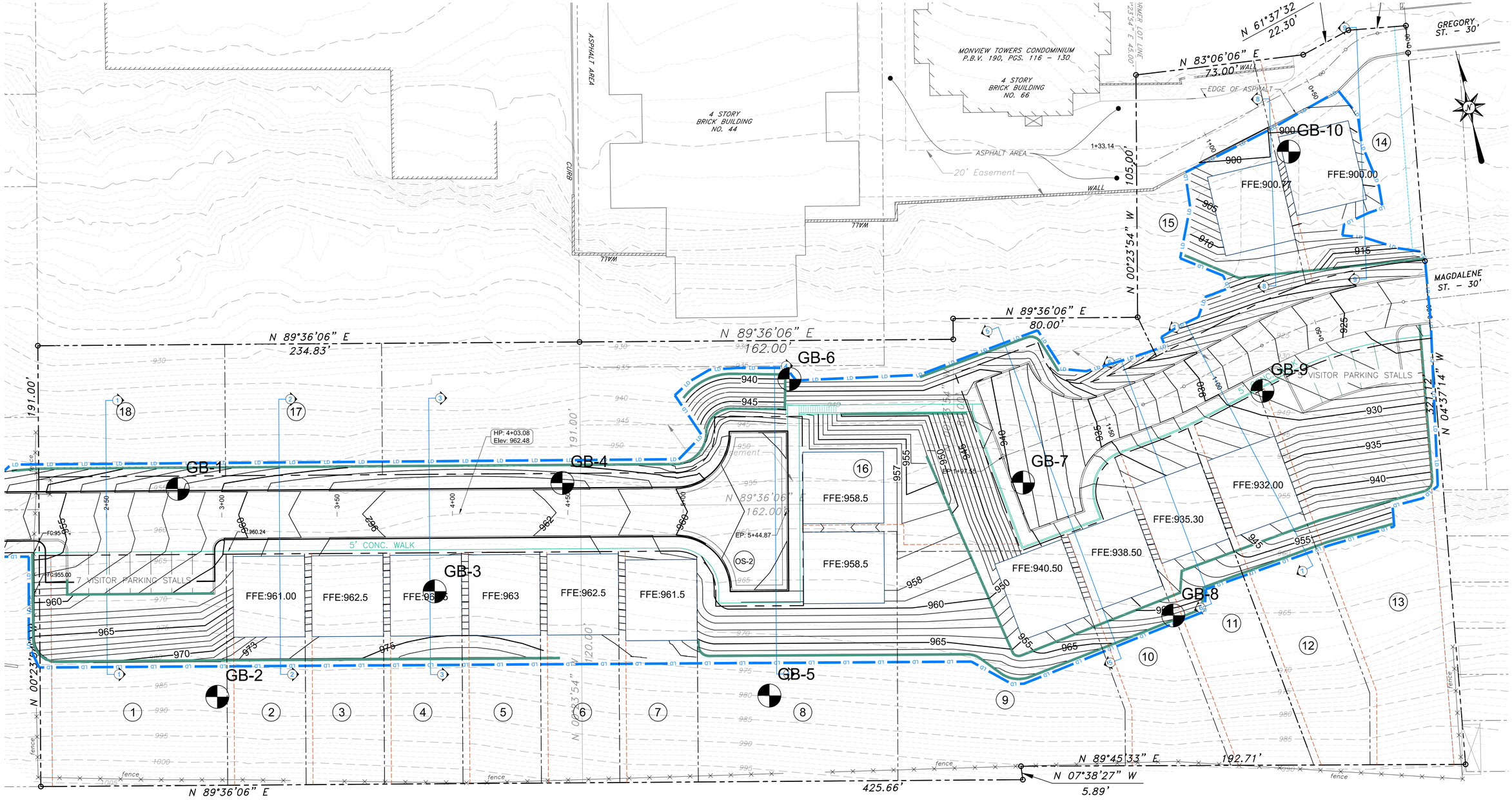

SCALE - FEET
20 0 20 40

NO.	REVISION DESCRIPTION	DATE	APPROVED

CHECKED BY: TM | APPROVED BY: HM

PREPARED BY:
KU Resources, Inc.
22 South Linden Street
Duquesne, PA 15110
412.469.9331
412.469.9336 fax
www.kuresources.com

PREPARED FOR:
SYNERGY CAPITAL, INC.
1014 PERRY HIGHWAY, SUITE 100
PITTSBURGH, PA 15237

PROJECT:
VILLAS AT WINTER PARK
CITY OF PITTSBURGH, COUNTY OF ALLEGHENY
PENNSYLVANIA

DRAWING TITLE:
BORING LOCATIONS

SHEET NO.
GEO-101

DRAWN BY: GAK 02/03/15 | CAD FILE NUMBER: 141000003 | 24x36 | PROJECT NUMBER: SCI-14100.CSD

ATTACHMENTS

DRAIN DETAIL

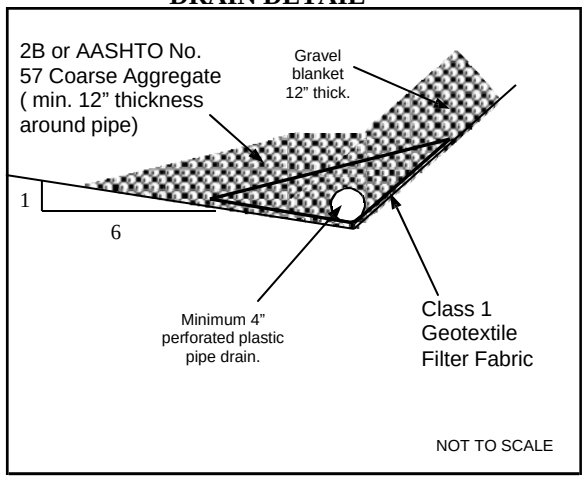

Note: Keyways, benches, and drains should be constructed at a sufficient gradient to collect and direct subsurface water away from slopes.

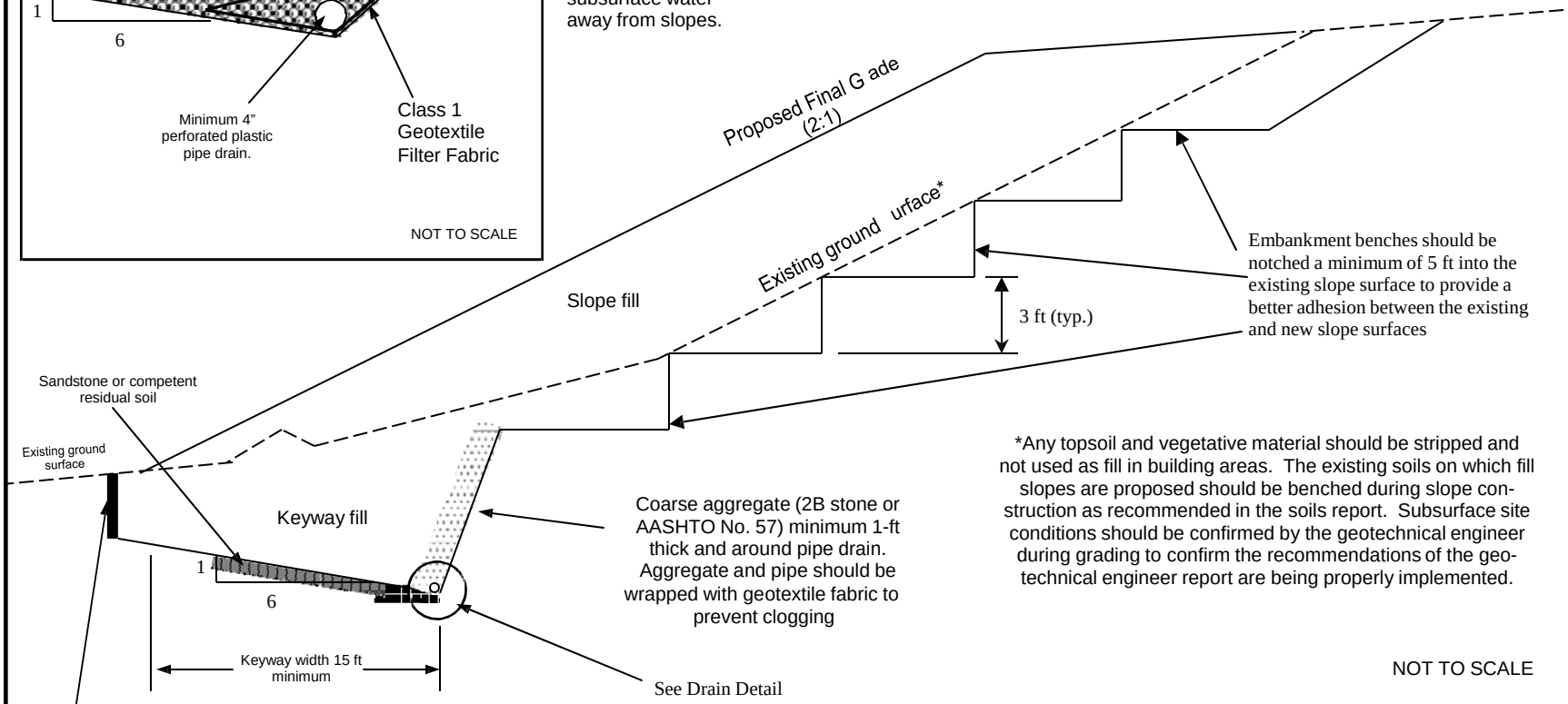

*Any topsoil and vegetative material should be stripped and not used as fill in building areas. The existing soils on which fill slopes are proposed should be benched during slope construction as recommended in the soils report. Subsurface site conditions should be confirmed by the geotechnical engineer during grading to confirm the recommendations of the geotechnical engineer report are being properly implemented.

NOT TO SCALE

KU Resources, Inc.

GENERAL KEYWAY AND DRAIN DETAIL

VILLAS at WINTER GARDEN
PITTSBURGH, PA
Prepared for: SYNERGY CAPITAL, INC.

DRAWN BY:	KK	01/15/15
CHECKED BY:	HPM	01/15/15
APPROVED BY:	HPM	01/15/15
DRAWING NO.	SCI14438GEO	

FIGURE 3

APPENDICES

Appendix A
Boring Logs

KU Resources, Inc.

Project:	South Side Slopes SCI014438.GEO	**Boring:**	GB-1
		Sheet:	1 of 1
Geologist:	S. Pesch	**Date:**	12/17/2014
Driller:	Terra Testing, Inc.	**Location:**	Pittsburgh, PA
Method:	Hollow Stem Augers		

Depth (ft)	Sample No. and Type	SPT Blows (6") or RQD (%)	Sample Recovery (ft)	Lithologic Description and Comments	Construction Details
0	SS-1	1, 1, 1	1.5/ 1.5	0-0.8 ft: Dark brown silty clay, moist 0.8-1.5 ft: Red/brown, mottled clay, with some fine gravel, damp to dry	
	SS-2	8, 12 11	1.5/ 1.5	3.0-3.6 ft: Dark brown silty clay, with some gravel, damp 3.6-4.5 ft: Tan, weathered siltstone, dry	
5					
	SS-3	13, 32, 28	1.3/ 1.5	6-7.5 ft: SAA, dry	
10	SS-4	50/4	0.3/ 0.3	9-9.3 ft: Gray fissle shale, spoon refusal at 9.3 Auger refusal at 10 feet, gray, micaceous siltsone in auger teeth, compatent	
15					
20					

KU Resources, Inc.

Project:	South Side Slopes SCI014438.GEO	**Boring:**	GB-10
		Sheet:	1 of 1
Geologist:	S. Pesch	**Date:**	12/19/2014
Driller:	Terra Testing, Inc.	**Location:**	Pittsburgh, PA
Method:	Hollow Stem Augers		

Depth (ft)	Sample No. and Type	SPT Blows (6") or RQD (%)	Sample Recovery (ft)	Lithologic Description and Comments	Construction Details
0	SS-1	1, 1, 1	1.5/ 1.5	0-0.7ft: Dark brown, clay and gravel, with glass and brick fragments, moist 0.7-1.5 ft: Brown clay, with some silt and fine gravel, damp	
	SS-2	3, 5, 6	1.3/ 1.5	3-4.5ft: Tan/brown clay, with some weathered bedrock remnants, dry	
5					
	SS-3	7, 7, 11	1.5/ 1.5	6-7.5 ft: Tan/gray silt, with some clay, fine sand, and trace fine coal fragments and trace fine gravel, dry	
10	SS-4	20, 21, 15	1.5/ 1.5	9-10.5 ft: Tan, weathered shale and fractured claystone, dry	
	SS-5	4, 4, 2	1.5/ 1.5	12-13.5 ft: Brown clay, with some silt and fine gravel, trace fine sand, damp to moist	
15	SS-6	5, 4, 6	1.5/ 1.5	15-16.5 ft: Tan to red/tan, clay, with trace to some sand and silt, trace gravel, damp	
20					

KU Resources, Inc.

Project:	South Side Slopes SCI014438.GEO	**Boring:**	GB-2
		Sheet:	1 of 2
Geologist:	S. Pesch	**Date:**	12/17/2014
Driller:	Terra Testing, Inc.	**Location:**	Pittsburgh, PA
Method:	Hollow Stem Augers		

Depth (ft)	Sample No. and Type	SPT Blows (6") or RQD (%)	Sample Recovery (ft)	Lithologic Description and Comments	Construction Details
0	SS-1	1, 1, 1	1.5/ 1.5	0-1.5 ft: Dark brown, silty clay, with trace fine gravel	
	SS-2	7, 12 18	0/ 1.5	3-4.5ft: No recovery	
5	SS-3	4, 11, 19	1.5/ 1.5	4.5-6 ft: Light brown, highly weathered shale	
	SS-4	6, 21, 45	1.5/ 1.5	6-7.5 ft: Light brown to gray, weathered, fissle shale, dry	
10	SS-5	9, 28, 32	1.5/ 1.5	9-10.5 ft: Gray, highly weathered/fractured shale, dry	
	SS-6	14, 27, 39	1.5/ 1.5	12-13.5 ft: Red, highly weathered, fissle shale, dry	
15	SS-6	9, 32, 50/3	1.3/ 1.3	15-16.3 ft: Gray, weathered shale/mudstone, hard is spots, dry. Spoon refusal at 16.3. Auger refusal at 16.5	
	CORE - 1			16.5-18 ft: Gray siltstone	
	CORE - 2			18-22 ft: Red to tan, highly weathered and fractured shale and claystone	
20					

KU Resources, Inc.

Project:	South Side Slopes SCI014438.GEO	**Boring:**	GB-3
		Sheet:	1 of 1
Geologist:	S. Pesch	**Date:**	12/17/2014
Driller:	Terra Testing, Inc.	**Location:**	Pittsburgh, PA
Method:	Hollow Stem Augers		

Depth (ft)	Sample No. and Type	SPT Blows (6") or RQD (%)	Sample Recovery (ft)	Lithologic Description and Comments	Construction Details
0					
	SS-1	0, 1, 2	1.2/ 1.5	0-1.5 ft: Dark brown, silty clay, with trace to some fine gravel and brick fragments, moist	
	SS-2	3, 2, 3	1.5/ 1.5	3-4.5ft: Tan/brown/purple clay, with some gravel, dry	
5					
	SS-3	3, 5, 9	1.2/ 1.5	6-6.2 ft: Tan/brown/purple clay, with some gravel, dry 6.2-7.5 ft: Gray/dark gray, highly weathered bedrock, consisting primarily of dry clay and silt	
10	SS-4	13, 29, 39	1.3/ 1.3	9-10.5 ft: Tan/brown, clay, with some silt and gravel, trace sand, very dry (weathered bedrock)	
	SS-5	10, 17, 34	1.5/ 1.5	12-13.5 ft: Tan/gray, weathered shale, with some large angular grave sized shale fragments	
15	SS-6	10, 22, 27	1.5/ 1.5	15-16.5 ft: Red, weathered shale, dry	
	SS-7	20, 50/5	1.0/ 1.0	18-19 ft: Red, weathered claystone. Spoon refusal at 19 feet.	
20					

KU Resources, Inc.

Project:	South Side Slopes SCI014438.GEO	**Boring:**	GB-4
		Sheet:	1 of 1
Geologist:	S. Pesch	**Date:**	12/18/2014
Driller:	Terra Testing, Inc.	**Location:**	Pittsburgh, PA
Method:	Hollow Stem Augers		

Depth (ft)	Sample No. and Type	SPT Blows (6") or RQD (%)	Sample Recovery (ft)	Lithologic Description and Comments	Construction Details
0	SS-1	0, 1, 2	1.5/ 1.5	0-1.5 ft: Dark brown, silty clay, with trace to some fine gravel, moist	
	SS-2	7, 6, 8	1.5/ 1.5	3-4.5ft: Tan/gray/purple clay, with some gravel, damp	
5					
	SS-3	10, 12, 21	1.5/ 1.5	6-7.5 ft: Tan/brown clay, with some angular gravel, trace to some silt, dry (highly weathered bedrock)	
	SS-4	50/4	0.4/0.4	9-9.4 ft: Red clay, with gray claystone in tip of spoon	
10					
15					
20					

KU Resources, Inc.

Project:	South Side Slopes SCI014438.GEO	**Boring:**	GB-5
		Sheet:	1 of 2
Geologist:	S. Pesch	**Date:**	12/18/2014
Driller:	Terra Testing, Inc.	**Location:**	Pittsburgh, PA
Method:	Hollow Stem Augers		

Depth (ft)	Sample No. and Type	SPT Blows (6") or RQD (%)	Sample Recovery (ft)	Lithologic Description and Comments	Construction Details
0					
	SS-1	1, 1, 2	1.5/ 1.5	0-1.5 ft: Dark brown, silty clay, with trace to some gravel, moist	
	SS-2	7, 6, 5	1.5/ 1.5	3-4.5ft: Tan/gray weathered shale, dry	
5					
	SS-3	9, 32, 28	1.5/ 1.5	6.0-7.5 ft: Tan/gray weathered shale, dry	
	SS-4	17, 37, 28	1.5/ 1.5	9-10.3 ft: Red, weathered shale	
10				10.3-10.5 ft: Gray shale	
	SS-5	12, 16, 46	1.5/ 1.5	12-13 ft: Gray/red, weathered shale,	
				13-14 ft: Hard, gray, siltstone. Hard drilling to 14.5	
15	SS-6	11, 17, 21	1.5/ 1.5	15-16.5 ft: Red, weathered shale, dry	
	SS-7	50/4	0.3/0.3	18-18.3 ft: Red claystone in tip of shoe	
20					

KU Resources, Inc.

Project:	South Side Slopes SCI014438.GEO	**Boring:**	GB-5
		Sheet:	2 of 2
Geologist:	S. Pesch	**Date:**	12/18/2014
Driller:	Terra Testing, Inc.	**Location:**	Pittsburgh, PA
Method:	Hollow Stem Augers		

Depth (ft)	Sample No. and Type	SPT Blows (6") or RQD (%)	Sample Recovery (ft)	Lithologic Description and Comments	Construction Details
20	SS-8	50/3	0.3/0.3	20-20.3 ft: Gray shale/claystone	
	SS-9	27, 50/3	0.7/0.7	23-23.7 ft: Red/gray shale in cuttings and on auger head when removed	
25					
30					
35					
40					

KU Resources, Inc.

Project:	South Side Slopes SCI014438.GEO	**Boring:**	GB-6
		Sheet:	1 of 1
Geologist:	S. Pesch	**Date:**	12/17/2014
Driller:	Terra Testing, Inc.	**Location:**	Pittsburgh, PA
Method:	Hollow Stem Augers		

Depth (ft)	Sample No. and Type	SPT Blows (6") or RQD (%)	Sample Recovery (ft)	Lithologic Description and Comments	Construction Details
0	SS-1	0, 1, 2	1.5/ 1.5	0-1.5 ft: Dark brown, silty clay, with trace gravel, moist	
	SS-2	3, 7, 6	1.5/ 1.5	3-3.5ft: Dark brown, silty clay, with trace gravel, moist 3.5-4.5 ft: Light brown weathered shale and clay, dry	
5					
	SS-3	6, 13, 7	1.5/ 1.5	6-7.5 ft: Tan, weathered claystone and clay, dry	
	SS-4	50/2	0.2/0.2	9-9.2 ft: Tan claystone, slightly weathered	
10					
	SS-5	10, 50/2	0.7/0.7	12-12.7 ft: Gray claystone, dry	
15	SS-6	50/1	0.1/0.1	15-15.1 ft: Gray claystone, dry	
20					

KU Resources, Inc.

Project:	South Side Slopes SCI014438.GEO	**Boring:**	GB-7
		Sheet:	1 of 1
Geologist:	S. Pesch	**Date:**	12/18/2014
Driller:	Terra Testing, Inc.	**Location:**	Pittsburgh, PA
Method:	Hollow Stem Augers		

Depth (ft)	Sample No. and Type	SPT Blows (6") or RQD (%)	Sample Recovery (ft)	Lithologic Description and Comments	Construction Details
0	SS-1	0, 1, 1	1.4/ 1.5	0-1.5 ft: Brown/dark brown, clay, with some silt, trace brick, coal, and gravel, moist	
	SS-2	3, 5, 6	1.5/ 1.5	3-4.5ft: Tan/gray, mottled clay, with trace to some gravel, damp	
5					
	SS-3	3, 7, 12	1.5/ 1.5	6-7.5 ft: Red clay, with some weathered shale, damp	
10	SS-4	5, 13, 41	1.5/ 1.5	9-10.5 ft: Brown/tan, weathered shale, wet 9.3-9.6, dry below	
	SS-5	50/3	0.3/0.3	12-12.3 ft: Tan/gray weathered claystone	
15	SS-6	50/2	0.2/0.2	15-15.2 ft: Tan/gray shale, dry	
	SS-7	50/2	0.2/0.2	18-18.2 ft: Tan/gray shale/claystone , fractured	
20					

KU Resources, Inc.

Project:	South Side Slopes SCI014438.GEO	**Boring:**	GB-8
		Sheet:	1 of 2
Geologist:	S. Pesch	**Date:**	12/19/2014
Driller:	Terra Testing, Inc.	**Location:**	Pittsburgh, PA
Method:	Hollow Stem Augers		

Depth (ft)	Sample No. and Type	SPT Blows (6") or RQD (%)	Sample Recovery (ft)	Lithologic Description and Comments	Construction Details
0	SS-1	0, 0, 1	1.2/ 1.5	0-1 ft: Dark brown, silty clay, with some fine gravel, moist	
				1-1.5 ft: Red clay, with some red shale fragments, damp	
	SS-2	5, 9, 5	1.1/ 1.5	3-4.5 ft: Red/brown clay, with some silt and gravel, dry (weathered bedrock)	
5					
	SS-3	6, 10, 11	1.5/ 1.5	6.0-7.5 ft: Purple/tan, weathered shale, with some clay, dry	
	SS-4	11, 23, 33	1.5/ 1.5	9-10.5 ft: Tan, weathered/fractured shale, dry	
10					
	SS-5	50/5	0.5/0.5	12-12.5 ft: Tan, fractured claystone, dry	
15	SS-6	18, 24, 31	1.5/ 1.5	15-16.5 ft: Red/gray, weathered shale and clay, damp to moist	
				Red clay cuttings visibly wet at 17 feet	
	SS-7	50/5	0.5/0.5	18-18.5 ft: Red/gray weathered shale, dry	
20					

KU Resources, Inc.

Project:	South Side Slopes SCI014438.GEO	**Boring:**	GB-8
		Sheet:	2 of 2
Geologist:	S. Pesch	**Date:**	12/19/2014
Driller:	Terra Testing, Inc.	**Location:**	Pittsburgh, PA
Method:	Hollow Stem Augers		

Depth (ft)	Sample No. and Type	SPT Blows (6") or RQD (%)	Sample Recovery (ft)	Lithologic Description and Comments	Construction Details
20					
	SS-8	50/2	0.2/0.2	21-21.2 ft: Tan/red (rust colored) weathered shale and fractured claystone, dry	
	SS-9	50/2	0.2/0.2	24-24.2 ft: gray, fractured shale/claystone	
25					
30					
35					
40					

KU Resources, Inc.

Project:	South Side Slopes SCI014438.GEO	**Boring:**	GB-9
		Sheet:	1 of 1
Geologist:	S. Pesch	**Date:**	12/19/2014
Driller:	Terra Testing, Inc.	**Location:**	Pittsburgh, PA
Method:	Hollow Stem Augers		

Depth (ft)	Sample No. and Type	SPT Blows (6") or RQD (%)	Sample Recovery (ft)	Lithologic Description and Comments	Construction Details
0	SS-1	0, 1, 2	1.5/ 1.5	0-1.5 ft: Dark Brown clay and silt, with trace to some fine gravel and brick fragments, damp	
	SS-2	3, 5, 8	1.5/ 1.5	3-4.5ft: Dark Brown clay and silt, with trace to some fine gravel and brick fragments, damp	
5					
	SS-3	3, 6, 9	1.5/ 1.5	6-7.2 ft: Red clay and weathered bedrock, dry to damp	
				7.2-7.5 ft: Tan weathered clay and shale, dry	
10	SS-4	2, 4, 14	1.5/ 1.5	9-10.5 ft: Tan, weathered/fractured claystone, with some clay, dry	
	SS-5	13, 50/2	0.7/0.7	12-12.7 ft: Tan/gray, weathered/fractured claystone/shale, dry	
15	SS-6	50/3	0.3/0.3	15-15.3 ft: Tan/gray, weathered/fractured claystone/shale, dry	
20					

Appendix B
Soil Survey

United States Department of Agriculture

Natural Resources Conservation Service

A product of the National Cooperative Soil Survey, a joint effort of the United States Department of Agriculture and other Federal agencies, State agencies including the Agricultural Experiment Stations, and local participants

Custom Soil Resource Report for Allegheny County, Pennsylvania

Villas @ Winter Park, Pittsburgh, Pennsylvania

January 15, 2015

Preface

Soil surveys contain information that affects land use planning in survey areas. They highlight soil limitations that affect various land uses and provide information about the properties of the soils in the survey areas. Soil surveys are designed for many different users, including farmers, ranchers, foresters, agronomists, urban planners, community officials, engineers, developers, builders, and home buyers. Also, conservationists, teachers, students, and specialists in recreation, waste disposal, and pollution control can use the surveys to help them understand, protect, or enhance the environment.

Various land use regulations of Federal, State, and local governments may impose special restrictions on land use or land treatment. Soil surveys identify soil properties that are used in making various land use or land treatment decisions. The information is intended to help the land users identify and reduce the effects of soil limitations on various land uses. The landowner or user is responsible for identifying and complying with existing laws and regulations.

Although soil survey information can be used for general farm, local, and wider area planning, onsite investigation is needed to supplement this information in some cases. Examples include soil quality assessments (http://www.nrcs.usda.gov/wps/portal/nrcs/main/soils/health/) and certain conservation and engineering applications. For more detailed information, contact your local USDA Service Center (http://offices.sc.egov.usda.gov/locator/app?agency=nrcs) or your NRCS State Soil Scientist (http://www.nrcs.usda.gov/wps/portal/nrcs/detail/soils/contactus/?cid=nrcs142p2_053951).

Great differences in soil properties can occur within short distances. Some soils are seasonally wet or subject to flooding. Some are too unstable to be used as a foundation for buildings or roads. Clayey or wet soils are poorly suited to use as septic tank absorption fields. A high water table makes a soil poorly suited to basements or underground installations.

The National Cooperative Soil Survey is a joint effort of the United States Department of Agriculture and other Federal agencies, State agencies including the Agricultural Experiment Stations, and local agencies. The Natural Resources Conservation Service (NRCS) has leadership for the Federal part of the National Cooperative Soil Survey.

Information about soils is updated periodically. Updated information is available through the NRCS Web Soil Survey, the site for official soil survey information.

The U.S. Department of Agriculture (USDA) prohibits discrimination in all its programs and activities on the basis of race, color, national origin, age, disability, and where applicable, sex, marital status, familial status, parental status, religion, sexual orientation, genetic information, political beliefs, reprisal, or because all or a part of an individual's income is derived from any public assistance program. (Not all prohibited bases apply to all programs.) Persons with disabilities who require alternative means

for communication of program information (Braille, large print, audiotape, etc.) should contact USDA's TARGET Center at (202) 720-2600 (voice and TDD). To file a complaint of discrimination, write to USDA, Director, Office of Civil Rights, 1400 Independence Avenue, S.W., Washington, D.C. 20250-9410 or call (800) 795-3272 (voice) or (202) 720-6382 (TDD). USDA is an equal opportunity provider and employer.

Contents

Preface.....2
How Soil Surveys Are Made.....5
Soil Map.....7
Soil Map.....8
Legend.....9
Map Unit Legend.....10
Map Unit Descriptions.....10
Allegheny County, Pennsylvania.....12
UCD—Urban land-Culleoka complex, moderately steep.....12
UCE—Urban land-Culleoka complex, steep.....13
URC—Urban land-Rainsboro complex, sloping.....14
Soil Information for All Uses.....16
Soil Reports.....16
Building Site Development.....16
Dwellings and Small Commercial Buildings (Villas @ Winter Park, Pittsburgh, Pennsylvania).....16
Roads and Streets, Shallow Excavations, and Lawns and Landscaping (Villas @ Winter Park, Pittsburgh, Pennsylvania).....18
Soil Physical Properties.....21
Engineering Properties (Villas @ Winter Park, Pittsburgh, Pennsylvania).....21
Particle Size and Coarse Fragments (Villas @ Winter Park, Pittsburgh, Pennsylvania).....26
Physical Soil Properties (Villas @ Winter Park, Pittsburgh, Pennsylvania).....28
Soil Qualities and Features.....33
Soil Features (Villas @ Winter Park, Pittsburgh, Pennsylvania).....33
References.....36

How Soil Surveys Are Made

Soil surveys are made to provide information about the soils and miscellaneous areas in a specific area. They include a description of the soils and miscellaneous areas and their location on the landscape and tables that show soil properties and limitations affecting various uses. Soil scientists observed the steepness, length, and shape of the slopes; the general pattern of drainage; the kinds of crops and native plants; and the kinds of bedrock. They observed and described many soil profiles. A soil profile is the sequence of natural layers, or horizons, in a soil. The profile extends from the surface down into the unconsolidated material in which the soil formed or from the surface down to bedrock. The unconsolidated material is devoid of roots and other living organisms and has not been changed by other biological activity.

Currently, soils are mapped according to the boundaries of major land resource areas (MLRAs). MLRAs are geographically associated land resource units that share common characteristics related to physiography, geology, climate, water resources, soils, biological resources, and land uses (USDA, 2006). Soil survey areas typically consist of parts of one or more MLRA.

The soils and miscellaneous areas in a survey area occur in an orderly pattern that is related to the geology, landforms, relief, climate, and natural vegetation of the area. Each kind of soil and miscellaneous area is associated with a particular kind of landform or with a segment of the landform. By observing the soils and miscellaneous areas in the survey area and relating their position to specific segments of the landform, a soil scientist develops a concept, or model, of how they were formed. Thus, during mapping, this model enables the soil scientist to predict with a considerable degree of accuracy the kind of soil or miscellaneous area at a specific location on the landscape.

Commonly, individual soils on the landscape merge into one another as their characteristics gradually change. To construct an accurate soil map, however, soil scientists must determine the boundaries between the soils. They can observe only a limited number of soil profiles. Nevertheless, these observations, supplemented by an understanding of the soil-vegetation-landscape relationship, are sufficient to verify predictions of the kinds of soil in an area and to determine the boundaries.

Soil scientists recorded the characteristics of the soil profiles that they studied. They noted soil color, texture, size and shape of soil aggregates, kind and amount of rock fragments, distribution of plant roots, reaction, and other features that enable them to identify soils. After describing the soils in the survey area and determining their properties, the soil scientists assigned the soils to taxonomic classes (units). Taxonomic classes are concepts. Each taxonomic class has a set of soil characteristics with precisely defined limits. The classes are used as a basis for comparison to classify soils systematically. Soil taxonomy, the system of taxonomic classification used in the United States, is based mainly on the kind and character of soil properties and the arrangement of horizons within the profile. After the soil scientists classified and named the soils in the survey area, they compared the

individual soils with similar soils in the same taxonomic class in other areas so that they could confirm data and assemble additional data based on experience and research.

The objective of soil mapping is not to delineate pure map unit components; the objective is to separate the landscape into landforms or landform segments that have similar use and management requirements. Each map unit is defined by a unique combination of soil components and/or miscellaneous areas in predictable proportions. Some components may be highly contrasting to the other components of the map unit. The presence of minor components in a map unit in no way diminishes the usefulness or accuracy of the data. The delineation of such landforms and landform segments on the map provides sufficient information for the development of resource plans. If intensive use of small areas is planned, onsite investigation is needed to define and locate the soils and miscellaneous areas.

Soil scientists make many field observations in the process of producing a soil map. The frequency of observation is dependent upon several factors, including scale of mapping, intensity of mapping, design of map units, complexity of the landscape, and experience of the soil scientist. Observations are made to test and refine the soil-landscape model and predictions and to verify the classification of the soils at specific locations. Once the soil-landscape model is refined, a significantly smaller number of measurements of individual soil properties are made and recorded. These measurements may include field measurements, such as those for color, depth to bedrock, and texture, and laboratory measurements, such as those for content of sand, silt, clay, salt, and other components. Properties of each soil typically vary from one point to another across the landscape.

Observations for map unit components are aggregated to develop ranges of characteristics for the components. The aggregated values are presented. Direct measurements do not exist for every property presented for every map unit component. Values for some properties are estimated from combinations of other properties.

While a soil survey is in progress, samples of some of the soils in the area generally are collected for laboratory analyses and for engineering tests. Soil scientists interpret the data from these analyses and tests as well as the field-observed characteristics and the soil properties to determine the expected behavior of the soils under different uses. Interpretations for all of the soils are field tested through observation of the soils in different uses and under different levels of management. Some interpretations are modified to fit local conditions, and some new interpretations are developed to meet local needs. Data are assembled from other sources, such as research information, production records, and field experience of specialists. For example, data on crop yields under defined levels of management are assembled from farm records and from field or plot experiments on the same kinds of soil.

Predictions about soil behavior are based not only on soil properties but also on such variables as climate and biological activity. Soil conditions are predictable over long periods of time, but they are not predictable from year to year. For example, soil scientists can predict with a fairly high degree of accuracy that a given soil will have a high water table within certain depths in most years, but they cannot predict that a high water table will always be at a specific level in the soil on a specific date.

After soil scientists located and identified the significant natural bodies of soil in the survey area, they drew the boundaries of these bodies on aerial photographs and identified each as a specific map unit. Aerial photographs show trees, buildings, fields, roads, and rivers, all of which help in locating boundaries accurately.

Soil Map

The soil map section includes the soil map for the defined area of interest, a list of soil map units on the map and extent of each map unit, and cartographic symbols displayed on the map. Also presented are various metadata about data used to produce the map, and a description of each soil map unit.

Custom Soil Resource Report
Soil Map

Map Scale: 1:1,360 if printed on A landscape (11" x 8.5") sheet.

N

Meters: 0 20 40 80 120

Feet: 0 50 100 200 300

Map projection: Web Mercator Corner coordinates: WGS84 Edge tics: UTM Zone 17N WGS84

MAP LEGEND

Area of Interest (AOI)

Area of Interest (AOI)

Soils

Soil Map Unit Polygons

Soil Map Unit Lines

Soil Map Unit Points

Special Point Features

Blowout

Borrow Pit

Clay Spot

Closed Depression

Gravel Pit

Gravelly Spot

Landfill

Lava Flow

Marsh or swamp

Mine or Quarry

Miscellaneous Water

Perennial Water

Rock Outcrop

Saline Spot

Sandy Spot

Severely Eroded Spot

Sinkhole

Slide or Slip

Sodic Spot

Spoil Area

Stony Spot

Very Stony Spot

Wet Spot

Other

Special Line Features

Water Features

Streams and Canals

Transportation

Rails

Interstate Highways

US Routes

Major Roads

Local Roads

Background

Aerial Photography

MAP INFORMATION

The soil surveys that comprise your AOI were mapped at 1:15,800.

Warning: Soil Map may not be valid at this scale.

Enlargement of maps beyond the scale of mapping can cause misunderstanding of the detail of mapping and accuracy of soil line placement. The maps do not show the small areas of contrasting soils that could have been shown at a more detailed scale.

Please rely on the bar scale on each map sheet for map measurements.

Source of Map: Natural Resources Conservation Service
Web Soil Survey URL: http://websoilsurvey.nrcs.usda.gov
Coordinate System: Web Mercator (EPSG:3857)

Maps from the Web Soil Survey are based on the Web Mercator projection, which preserves direction and shape but distorts distance and area. A projection that preserves area, such as the Albers equal-area conic projection, should be used if more accurate calculations of distance or area are required.

This product is generated from the USDA-NRCS certified data as of the version date(s) listed below.

Soil Survey Area: Allegheny County, Pennsylvania
Survey Area Data: Version 7, Sep 15, 2014

Soil map units are labeled (as space allows) for map scales 1:50,000 or larger.

Date(s) aerial images were photographed: Jul 5, 2014—Aug 28, 2014

The orthophoto or other base map on which the soil lines were compiled and digitized probably differs from the background imagery displayed on these maps. As a result, some minor shifting of map unit boundaries may be evident.

Map Unit Legend

Allegheny County, Pennsylvania (PA003)			
Map Unit Symbol	**Map Unit Name**	**Acres in AOI**	**Percent of AOI**
UCD	Urban land-Culleoka complex, moderately steep	0.0	0.4%
UCE	Urban land-Culleoka complex, steep	4.1	98.5%
URC	Urban land-Rainsboro complex, sloping	0.0	1.0%
Totals for Area of Interest		**4.2**	**100.0%**

Map Unit Descriptions

The map units delineated on the detailed soil maps in a soil survey represent the soils or miscellaneous areas in the survey area. The map unit descriptions, along with the maps, can be used to determine the composition and properties of a unit.

A map unit delineation on a soil map represents an area dominated by one or more major kinds of soil or miscellaneous areas. A map unit is identified and named according to the taxonomic classification of the dominant soils. Within a taxonomic class there are precisely defined limits for the properties of the soils. On the landscape, however, the soils are natural phenomena, and they have the characteristic variability of all natural phenomena. Thus, the range of some observed properties may extend beyond the limits defined for a taxonomic class. Areas of soils of a single taxonomic class rarely, if ever, can be mapped without including areas of other taxonomic classes. Consequently, every map unit is made up of the soils or miscellaneous areas for which it is named and some minor components that belong to taxonomic classes other than those of the major soils.

Most minor soils have properties similar to those of the dominant soil or soils in the map unit, and thus they do not affect use and management. These are called noncontrasting, or similar, components. They may or may not be mentioned in a particular map unit description. Other minor components, however, have properties and behavioral characteristics divergent enough to affect use or to require different management. These are called contrasting, or dissimilar, components. They generally are in small areas and could not be mapped separately because of the scale used. Some small areas of strongly contrasting soils or miscellaneous areas are identified by a special symbol on the maps. If included in the database for a given area, the contrasting minor components are identified in the map unit descriptions along with some characteristics of each. A few areas of minor components may not have been observed, and consequently they are not mentioned in the descriptions, especially where the pattern was so complex that it was impractical to make enough observations to identify all the soils and miscellaneous areas on the landscape.

The presence of minor components in a map unit in no way diminishes the usefulness or accuracy of the data. The objective of mapping is not to delineate pure taxonomic classes but rather to separate the landscape into landforms or landform segments that have similar use and management requirements. The delineation of such segments

on the map provides sufficient information for the development of resource plans. If intensive use of small areas is planned, however, onsite investigation is needed to define and locate the soils and miscellaneous areas.

An identifying symbol precedes the map unit name in the map unit descriptions. Each description includes general facts about the unit and gives important soil properties and qualities.

Soils that have profiles that are almost alike make up a *soil series*. Except for differences in texture of the surface layer, all the soils of a series have major horizons that are similar in composition, thickness, and arrangement.

Soils of one series can differ in texture of the surface layer, slope, stoniness, salinity, degree of erosion, and other characteristics that affect their use. On the basis of such differences, a soil series is divided into *soil phases*. Most of the areas shown on the detailed soil maps are phases of soil series. The name of a soil phase commonly indicates a feature that affects use or management. For example, Alpha silt loam, 0 to 2 percent slopes, is a phase of the Alpha series.

Some map units are made up of two or more major soils or miscellaneous areas. These map units are complexes, associations, or undifferentiated groups.

A *complex* consists of two or more soils or miscellaneous areas in such an intricate pattern or in such small areas that they cannot be shown separately on the maps. The pattern and proportion of the soils or miscellaneous areas are somewhat similar in all areas. Alpha-Beta complex, 0 to 6 percent slopes, is an example.

An *association* is made up of two or more geographically associated soils or miscellaneous areas that are shown as one unit on the maps. Because of present or anticipated uses of the map units in the survey area, it was not considered practical or necessary to map the soils or miscellaneous areas separately. The pattern and relative proportion of the soils or miscellaneous areas are somewhat similar. Alpha-Beta association, 0 to 2 percent slopes, is an example.

An *undifferentiated group* is made up of two or more soils or miscellaneous areas that could be mapped individually but are mapped as one unit because similar interpretations can be made for use and management. The pattern and proportion of the soils or miscellaneous areas in a mapped area are not uniform. An area can be made up of only one of the major soils or miscellaneous areas, or it can be made up of all of them. Alpha and Beta soils, 0 to 2 percent slopes, is an example.

Some surveys include *miscellaneous areas*. Such areas have little or no soil material and support little or no vegetation. Rock outcrop is an example.

Allegheny County, Pennsylvania

UCD—Urban land-Culleoka complex, moderately steep

Map Unit Setting

National map unit symbol: l5pz
Elevation: 700 to 1,500 feet
Mean annual precipitation: 36 to 46 inches
Mean annual air temperature: 41 to 62 degrees F
Frost-free period: 130 to 170 days
Farmland classification: Not prime farmland

Map Unit Composition

Urban land: 60 percent
Culleoka and similar soils: 40 percent
Estimates are based on observations, descriptions, and transects of the mapunit.

Description of Urban Land

Setting

Down-slope shape: Linear
Across-slope shape: Linear
Parent material: Pavement, buildings and other artifically covered areas human transported material

Interpretive groups

Land capability classification (irrigated): None specified
Land capability classification (nonirrigated): 8s

Description of Culleoka

Setting

Landform: Hillslopes
Landform position (two-dimensional): Backslope
Landform position (three-dimensional): Side slope
Down-slope shape: Convex
Across-slope shape: Convex
Parent material: Fine-loamy residuum weathered from sandstone and siltstone

Typical profile

Ap - 0 to 10 inches: channery silt loam
Bt - 10 to 26 inches: channery silt loam
C - 26 to 31 inches: very channery silt loam
R - 31 to 33 inches: bedrock

Properties and qualities

Slope: 8 to 25 percent
Depth to restrictive feature: 20 to 40 inches to lithic bedrock
Natural drainage class: Well drained
Runoff class: Medium
Capacity of the most limiting layer to transmit water (Ksat): Very low to high (0.00 to 2.00 in/hr)
Depth to water table: More than 80 inches
Frequency of flooding: None
Frequency of ponding: None
Available water storage in profile: Low (about 4.8 inches)

Interpretive groups

Land capability classification (irrigated): None specified
Land capability classification (nonirrigated): 4e
Hydrologic Soil Group: B

UCE—Urban land-Culleoka complex, steep

Map Unit Setting

National map unit symbol: l5q0
Mean annual precipitation: 36 to 50 inches
Mean annual air temperature: 46 to 57 degrees F
Frost-free period: 120 to 200 days
Farmland classification: Not prime farmland

Map Unit Composition

Urban land: 80 percent
Culleoka and similar soils: 15 percent
Minor components: 5 percent
Estimates are based on observations, descriptions, and transects of the mapunit.

Description of Urban Land

Setting

Parent material: Human transported material

Typical profile

H1 - 0 to 6 inches: variable

Properties and qualities

Slope: 25 to 35 percent
Depth to restrictive feature: 10 inches to
Runoff class: Very high

Interpretive groups

Land capability classification (irrigated): None specified
Land capability classification (nonirrigated): 8s

Description of Culleoka

Setting

Landform: Hills
Landform position (two-dimensional): Backslope
Landform position (three-dimensional): Side slope
Down-slope shape: Convex
Across-slope shape: Convex
Parent material: Residuum weathered from nonacid siltstone, fine-grained sandstone, and shale

Typical profile

H1 - 0 to 7 inches: silt loam
H2 - 7 to 27 inches: channery silt loam

H3 - 27 to 29 inches: very flaggy clay loam
H4 - 29 to 31 inches: bedrock

Properties and qualities

Slope: 25 to 65 percent
Depth to restrictive feature: 20 to 40 inches to lithic bedrock
Natural drainage class: Well drained
Runoff class: High
Capacity of the most limiting layer to transmit water (Ksat): Very low to high (0.00 to 2.00 in/hr)
Depth to water table: More than 80 inches
Frequency of flooding: None
Frequency of ponding: None
Available water storage in profile: Low (about 4.6 inches)

Interpretive groups

Land capability classification (irrigated): None specified
Land capability classification (nonirrigated): 7e
Hydrologic Soil Group: B

Minor Components

Gilpin

Percent of map unit: 5 percent

URC—Urban land-Rainsboro complex, sloping

Map Unit Setting

National map unit symbol: l5q4
Elevation: 480 to 3,000 feet
Mean annual precipitation: 30 to 65 inches
Mean annual air temperature: 46 to 59 degrees F
Frost-free period: 120 to 180 days
Farmland classification: Not prime farmland

Map Unit Composition

Urban land: 75 percent
Rainsboro and similar soils: 15 percent
Minor components: 10 percent
Estimates are based on observations, descriptions, and transects of the mapunit.

Description of Urban Land

Setting

Parent material: Human transported material

Typical profile

H1 - 0 to 6 inches: variable

Properties and qualities

Slope: 8 to 25 percent

Depth to restrictive feature: 10 inches to
Runoff class: Very high

Interpretive groups

Land capability classification (irrigated): None specified
Land capability classification (nonirrigated): 8s

Description of Rainsboro

Setting

Landform: Terraces
Landform position (two-dimensional): Toeslope
Landform position (three-dimensional): Riser
Down-slope shape: Linear
Across-slope shape: Convex
Parent material: Old alluvium

Typical profile

H1 - 0 to 9 inches: silt loam
H2 - 9 to 26 inches: silt loam
H3 - 26 to 40 inches: silt loam
H4 - 40 to 60 inches: sandy clay loam
H5 - 60 to 72 inches: gravelly sandy loam

Properties and qualities

Slope: 8 to 25 percent
Depth to restrictive feature: More than 80 inches
Natural drainage class: Moderately well drained
Runoff class: Medium
Capacity of the most limiting layer to transmit water (Ksat): Moderately low to moderately high (0.06 to 0.60 in/hr)
Depth to water table: About 19 to 30 inches
Frequency of flooding: None
Frequency of ponding: None
Available water storage in profile: High (about 9.8 inches)

Minor Components

Allegheny

Percent of map unit: 5 percent
Landform: Terraces

Ernest

Percent of map unit: 5 percent

Soil Information for All Uses

Soil Reports

The Soil Reports section includes various formatted tabular and narrative reports (tables) containing data for each selected soil map unit and each component of each unit. No aggregation of data has occurred as is done in reports in the Soil Properties and Qualities and Suitabilities and Limitations sections.

The reports contain soil interpretive information as well as basic soil properties and qualities. A description of each report (table) is included.

Building Site Development

This folder contains a collection of tabular reports that present soil interpretations related to building site development. The reports (tables) include all selected map units and components for each map unit, limiting features and interpretive ratings. Building site development interpretations are designed to be used as tools for evaluating soil suitability and identifying soil limitations for various construction purposes. As part of the interpretation process, the rating applies to each soil in its described condition and does not consider present land use. Example interpretations can include corrosion of concrete and steel, shallow excavations, dwellings with and without basements, small commercial buildings, local roads and streets, and lawns and landscaping.

Dwellings and Small Commercial Buildings (Villas @ Winter Park, Pittsburgh, Pennsylvania)

Soil properties influence the development of building sites, including the selection of the site, the design of the structure, construction, performance after construction, and maintenance. This table shows the degree and kind of soil limitations that affect dwellings and small commercial buildings.

The ratings in the table are both verbal and numerical. Rating class terms indicate the extent to which the soils are limited by all of the soil features that affect building site development. *Not limited* indicates that the soil has features that are very favorable for the specified use. Good performance and very low maintenance can be expected. *Somewhat limited* indicates that the soil has features that are moderately favorable for the specified use. The limitations can be overcome or minimized by special planning, design, or installation. Fair performance and moderate maintenance can be expected. *Very limited* indicates that the soil has one or more features that are

unfavorable for the specified use. The limitations generally cannot be overcome without major soil reclamation, special design, or expensive installation procedures. Poor performance and high maintenance can be expected.

Numerical ratings in the table indicate the severity of individual limitations. The ratings are shown as decimal fractions ranging from 0.01 to 1.00. They indicate gradations between the point at which a soil feature has the greatest negative impact on the use (1.00) and the point at which the soil feature is not a limitation (0.00).

Dwellings are single-family houses of three stories or less. For dwellings without basements, the foundation is assumed to consist of spread footings of reinforced concrete built on undisturbed soil at a depth of 2 feet or at the depth of maximum frost penetration, whichever is deeper. For dwellings with basements, the foundation is assumed to consist of spread footings of reinforced concrete built on undisturbed soil at a depth of about 7 feet. The ratings for dwellings are based on the soil properties that affect the capacity of the soil to support a load without movement and on the properties that affect excavation and construction costs. The properties that affect the load-supporting capacity include depth to a water table, ponding, flooding, subsidence, linear extensibility (shrink-swell potential), and compressibility. Compressibility is inferred from the Unified classification. The properties that affect the ease and amount of excavation include depth to a water table, ponding, flooding, slope, depth to bedrock or a cemented pan, hardness of bedrock or a cemented pan, and the amount and size of rock fragments.

Small commercial buildings are structures that are less than three stories high and do not have basements. The foundation is assumed to consist of spread footings of reinforced concrete built on undisturbed soil at a depth of 2 feet or at the depth of maximum frost penetration, whichever is deeper. The ratings are based on the soil properties that affect the capacity of the soil to support a load without movement and on the properties that affect excavation and construction costs. The properties that affect the load-supporting capacity include depth to a water table, ponding, flooding, subsidence, linear extensibility (shrink-swell potential), and compressibility (which is inferred from the Unified classification). The properties that affect the ease and amount of excavation include flooding, depth to a water table, ponding, slope, depth to bedrock or a cemented pan, hardness of bedrock or a cemented pan, and the amount and size of rock fragments.

Information in this table is intended for land use planning, for evaluating land use alternatives, and for planning site investigations prior to design and construction. The information, however, has limitations. For example, estimates and other data generally apply only to that part of the soil between the surface and a depth of 5 to 7 feet. Because of the map scale, small areas of different soils may be included within the mapped areas of a specific soil.

The information is not site specific and does not eliminate the need for onsite investigation of the soils or for testing and analysis by personnel experienced in the design and construction of engineering works.

Government ordinances and regulations that restrict certain land uses or impose specific design criteria were not considered in preparing the information in this table. Local ordinances and regulations should be considered in planning, in site selection, and in design.

Report—Dwellings and Small Commercial Buildings (Villas @ Winter Park, Pittsburgh, Pennsylvania)

[Onsite investigation may be needed to validate the interpretations in this table and to confirm the identity of the soil on a given site. The numbers in the value columns range from 0.01 to 1.00. The larger the value, the greater the potential limitation. The table shows only the top five limitations for any given soil. The soil may have additional limitations]

Dwellings and Small Commercial Buildings–Allegheny County, Pennsylvania							
Map symbol and soil name	Pct. of map unit	Dwellings without basements		Dwellings with basements		Small commercial buildings	
		Rating class and limiting features	Value	Rating class and limiting features	Value	Rating class and limiting features	Value
UCD—Urban land-Culleoka complex, moderately steep							
Urban land	60	Not rated		Not rated		Not rated	
Culleoka	40	Very limited		Very limited		Very limited	
		Slope	1.00	Depth to hard bedrock	1.00	Slope	1.00
		Depth to hard bedrock	0.35	Slope	1.00	Depth to hard bedrock	0.35
UCE—Urban land-Culleoka complex, steep							
Urban land	80	Not rated		Not rated		Not rated	
Culleoka	15	Very limited		Very limited		Very limited	
		Slope	1.00	Slope	1.00	Slope	1.00
		Depth to hard bedrock	0.46	Depth to hard bedrock	1.00	Depth to hard bedrock	0.46
URC—Urban land-Rainsboro complex, sloping							
Urban land	75	Not rated		Not rated		Not rated	
Rainsboro	15	Very limited		Very limited		Very limited	
		Slope	1.00	Depth to saturated zone	1.00	Slope	1.00
		Shrink-swell	0.50	Slope	1.00	Shrink-swell	0.50
		Depth to saturated zone	0.13	Shrink-swell	0.03	Depth to saturated zone	0.13

Roads and Streets, Shallow Excavations, and Lawns and Landscaping (Villas @ Winter Park, Pittsburgh, Pennsylvania)

Soil properties influence the development of building sites, including the selection of the site, the design of the structure, construction, performance after construction, and

maintenance. This table shows the degree and kind of soil limitations that affect local roads and streets, shallow excavations, and lawns and landscaping.

The ratings in the table are both verbal and numerical. Rating class terms indicate the extent to which the soils are limited by all of the soil features that affect building site development. *Not limited* indicates that the soil has features that are very favorable for the specified use. Good performance and very low maintenance can be expected. *Somewhat limited* indicates that the soil has features that are moderately favorable for the specified use. The limitations can be overcome or minimized by special planning, design, or installation. Fair performance and moderate maintenance can be expected. *Very limited* indicates that the soil has one or more features that are unfavorable for the specified use. The limitations generally cannot be overcome without major soil reclamation, special design, or expensive installation procedures. Poor performance and high maintenance can be expected.

Numerical ratings in the table indicate the severity of individual limitations. The ratings are shown as decimal fractions ranging from 0.01 to 1.00. They indicate gradations between the point at which a soil feature has the greatest negative impact on the use (1.00) and the point at which the soil feature is not a limitation (0.00).

Local roads and streets have an all-weather surface and carry automobile and light truck traffic all year. They have a subgrade of cut or fill soil material; a base of gravel, crushed rock, or soil material stabilized by lime or cement; and a surface of flexible material (asphalt), rigid material (concrete), or gravel with a binder. The ratings are based on the soil properties that affect the ease of excavation and grading and the traffic-supporting capacity. The properties that affect the ease of excavation and grading are depth to bedrock or a cemented pan, hardness of bedrock or a cemented pan, depth to a water table, ponding, flooding, the amount of large stones, and slope. The properties that affect the traffic-supporting capacity are soil strength (as inferred from the AASHTO group index number), subsidence, linear extensibility (shrink-swell potential), the potential for frost action, depth to a water table, and ponding.

Shallow excavations are trenches or holes dug to a maximum depth of 5 or 6 feet for graves, utility lines, open ditches, or other purposes. The ratings are based on the soil properties that influence the ease of digging and the resistance to sloughing. Depth to bedrock or a cemented pan, hardness of bedrock or a cemented pan, the amount of large stones, and dense layers influence the ease of digging, filling, and compacting. Depth to the seasonal high water table, flooding, and ponding may restrict the period when excavations can be made. Slope influences the ease of using machinery. Soil texture, depth to the water table, and linear extensibility (shrink-swell potential) influence the resistance to sloughing.

Lawns and landscaping require soils on which turf and ornamental trees and shrubs can be established and maintained. Irrigation is not considered in the ratings. The ratings are based on the soil properties that affect plant growth and trafficability after vegetation is established. The properties that affect plant growth are reaction; depth to a water table; ponding; depth to bedrock or a cemented pan; the available water capacity in the upper 40 inches; the content of salts, sodium, or calcium carbonate; and sulfidic materials. The properties that affect trafficability are flooding, depth to a water table, ponding, slope, stoniness, and the amount of sand, clay, or organic matter in the surface layer.

Information in this table is intended for land use planning, for evaluating land use alternatives, and for planning site investigations prior to design and construction. The information, however, has limitations. For example, estimates and other data generally apply only to that part of the soil between the surface and a depth of 5 to 7 feet.

Because of the map scale, small areas of different soils may be included within the mapped areas of a specific soil.

The information is not site specific and does not eliminate the need for onsite investigation of the soils or for testing and analysis by personnel experienced in the design and construction of engineering works.

Government ordinances and regulations that restrict certain land uses or impose specific design criteria were not considered in preparing the information in this table. Local ordinances and regulations should be considered in planning, in site selection, and in design.

Report—Roads and Streets, Shallow Excavations, and Lawns and Landscaping (Villas @ Winter Park, Pittsburgh, Pennsylvania)

[Onsite investigation may be needed to validate the interpretations in this table and to confirm the identity of the soil on a given site. The numbers in the value columns range from 0.01 to 1.00. The larger the value, the greater the potential limitation. The table shows only the top five limitations for any given soil. The soil may have additional limitations]

Roads and Streets, Shallow Excavations, and Lawns and Landscaping–Allegheny County, Pennsylvania							
Map symbol and soil name	Pct. of map unit	Local roads and streets		Shallow excavations		Lawns and landscaping	
		Rating class and limiting features	Value	Rating class and limiting features	Value	Rating class and limiting features	Value
UCD—Urban land-Culleoka complex, moderately steep							
Urban land	60	Not rated		Not rated		Not rated	
Culleoka	40	Very limited		Very limited		Very limited	
		Slope	1.00	Depth to hard bedrock	1.00	Slope	1.00
		Depth to hard bedrock	0.35	Slope	1.00	Low exchange capacity	0.50
		Low strength	0.22	Dusty	0.04	Large stones content	0.46
				Unstable excavation walls	0.01	Depth to bedrock	0.35
						Dusty	0.04
UCE—Urban land-Culleoka complex, steep							
Urban land	80	Not rated		Not rated		Not rated	
Culleoka	15	Very limited		Very limited		Very limited	
		Slope	1.00	Depth to hard bedrock	1.00	Slope	1.00
		Low strength	1.00	Slope	1.00	Depth to bedrock	0.46
		Depth to hard bedrock	0.46	Dusty	0.04	Dusty	0.04
				Unstable excavation walls	0.01		

Roads and Streets, Shallow Excavations, and Lawns and Landscaping–Allegheny County, Pennsylvania							
Map symbol and soil name	Pct. of map unit	Local roads and streets		Shallow excavations		Lawns and landscaping	
		Rating class and limiting features	Value	Rating class and limiting features	Value	Rating class and limiting features	Value
URC—Urban land-Rainsboro complex, sloping							
Urban land	75	Not rated		Not rated		Not rated	
Rainsboro	15	Very limited		Very limited		Very limited	
		Frost action	1.00	Depth to saturated zone	1.00	Slope	1.00
		Slope	1.00	Slope	1.00	Depth to saturated zone	0.06
		Low strength	1.00	Dense layer	0.50	Dusty	0.05
		Shrink-swell	0.50	Dusty	0.05		
		Depth to saturated zone	0.06	Unstable excavation walls	0.01		

Soil Physical Properties

This folder contains a collection of tabular reports that present soil physical properties. The reports (tables) include all selected map units and components for each map unit. Soil physical properties are measured or inferred from direct observations in the field or laboratory. Examples of soil physical properties include percent clay, organic matter, saturated hydraulic conductivity, available water capacity, and bulk density.

Engineering Properties (Villas @ Winter Park, Pittsburgh, Pennsylvania)

This table gives the engineering classifications and the range of engineering properties for the layers of each soil in the survey area.

Hydrologic soil group is a group of soils having similar runoff potential under similar storm and cover conditions. The criteria for determining Hydrologic soil group is found in the National Engineering Handbook, Chapter 7 issued May 2007(http://directives.sc.egov.usda.gov/OpenNonWebContent.aspx?content=17757.wba). Listing HSGs by soil map unit component and not by soil series is a new concept for the engineers. Past engineering references contained lists of HSGs by soil series. Soil series are continually being defined and redefined, and the list of soil series names changes so frequently as to make the task of maintaining a single national list virtually impossible. Therefore, the criteria is now used to calculate the HSG using the component soil properties and no such national series lists will be maintained. All such references are obsolete and their use should be discontinued. Soil properties that influence runoff potential are those that influence the minimum rate of infiltration for a bare soil after prolonged wetting and when not frozen. These properties are depth to a seasonal high water table, saturated hydraulic conductivity after prolonged wetting, and depth to a layer with a very slow water transmission rate. Changes in soil properties caused by land management or climate changes also cause the hydrologic

soil group to change. The influence of ground cover is treated independently. There are four hydrologic soil groups, A, B, C, and D, and three dual groups, A/D, B/D, and C/D. In the dual groups, the first letter is for drained areas and the second letter is for undrained areas.

The four hydrologic soil groups are described in the following paragraphs:

Group A. Soils having a high infiltration rate (low runoff potential) when thoroughly wet. These consist mainly of deep, well drained to excessively drained sands or gravelly sands. These soils have a high rate of water transmission.

Group B. Soils having a moderate infiltration rate when thoroughly wet. These consist chiefly of moderately deep or deep, moderately well drained or well drained soils that have moderately fine texture to moderately coarse texture. These soils have a moderate rate of water transmission.

Group C. Soils having a slow infiltration rate when thoroughly wet. These consist chiefly of soils having a layer that impedes the downward movement of water or soils of moderately fine texture or fine texture. These soils have a slow rate of water transmission.

Group D. Soils having a very slow infiltration rate (high runoff potential) when thoroughly wet. These consist chiefly of clays that have a high shrink-swell potential, soils that have a high water table, soils that have a claypan or clay layer at or near the surface, and soils that are shallow over nearly impervious material. These soils have a very slow rate of water transmission.

Depth to the upper and lower boundaries of each layer is indicated.

Texture is given in the standard terms used by the U.S. Department of Agriculture. These terms are defined according to percentages of sand, silt, and clay in the fraction of the soil that is less than 2 millimeters in diameter. "Loam," for example, is soil that is 7 to 27 percent clay, 28 to 50 percent silt, and less than 52 percent sand. If the content of particles coarser than sand is 15 percent or more, an appropriate modifier is added, for example, "gravelly."

Classification of the soils is determined according to the Unified soil classification system (ASTM, 2005) and the system adopted by the American Association of State Highway and Transportation Officials (AASHTO, 2004).

The Unified system classifies soils according to properties that affect their use as construction material. Soils are classified according to particle-size distribution of the fraction less than 3 inches in diameter and according to plasticity index, liquid limit, and organic matter content. Sandy and gravelly soils are identified as GW, GP, GM, GC, SW, SP, SM, and SC; silty and clayey soils as ML, CL, OL, MH, CH, and OH; and highly organic soils as PT. Soils exhibiting engineering properties of two groups can have a dual classification, for example, CL-ML.

The AASHTO system classifies soils according to those properties that affect roadway construction and maintenance. In this system, the fraction of a mineral soil that is less than 3 inches in diameter is classified in one of seven groups from A-1 through A-7 on the basis of particle-size distribution, liquid limit, and plasticity index. Soils in group A-1 are coarse grained and low in content of fines (silt and clay). At the other extreme, soils in group A-7 are fine grained. Highly organic soils are classified in group A-8 on the basis of visual inspection.

If laboratory data are available, the A-1, A-2, and A-7 groups are further classified as A-1-a, A-1-b, A-2-4, A-2-5, A-2-6, A-2-7, A-7-5, or A-7-6. As an additional refinement, the suitability of a soil as subgrade material can be indicated by a group index number.

Group index numbers range from 0 for the best subgrade material to 20 or higher for the poorest.

Rock fragments larger than 10 inches in diameter and 3 to 10 inches in diameter are indicated as a percentage of the total soil on a dry-weight basis. The percentages are estimates determined mainly by converting volume percentage in the field to weight percentage.

Percentage (of soil particles) passing designated sieves is the percentage of the soil fraction less than 3 inches in diameter based on an ovendry weight. The sieves, numbers 4, 10, 40, and 200 (USA Standard Series), have openings of 4.76, 2.00, 0.420, and 0.074 millimeters, respectively. Estimates are based on laboratory tests of soils sampled in the survey area and in nearby areas and on estimates made in the field.

Liquid limit and *plasticity index* (Atterberg limits) indicate the plasticity characteristics of a soil. The estimates are based on test data from the survey area or from nearby areas and on field examination.

References:

American Association of State Highway and Transportation Officials (AASHTO). 2004. Standard specifications for transportation materials and methods of sampling and testing. 24th edition.

American Society for Testing and Materials (ASTM). 2005. Standard classification of soils for engineering purposes. ASTM Standard D2487-00.

Absence of an entry indicates that the data were not estimated. The asterisk '*' denotes the representative texture; other possible textures follow the dash. The criteria for determining the hydrologic soil group for individual soil components is found in the National Engineering Handbook, Chapter 7 issued May 2007(http://directives.sc.egov.usda.gov/OpenNonWebContent.aspx?content=17757.wba).

Engineering Properties–Allegheny County, Pennsylvania														
Map unit symbol and soil name	Pct. of map unit	Hydrologic group	Depth	USDA texture	Classification		Fragments		Percentage passing sieve number—				Liquid limit	Plasticity index
					Unified	AASHTO	>10 inches	3-10 inches	4	10	40	200		
			In				*Pct*	*Pct*					*Pct*	
UCD—Urban land-Culleoka complex, moderately steep														
Culleoka	40	B	0-10	Channery silt loam	CL, CL-ML, ML	A-4	0	5-24	72-95	71-95	62-95	52-81	15-35	NP-10
			10-26	Channery silt loam, very channery silt loam, silty clay loam	CL, CL-ML, ML	A-4, A-6	0-4	4-30	64-95	64-95	56-95	47-87	20-40	2-20
			26-31	Very channery silt loam, extremely channery silt loam, very channery silty clay loam, flaggy loam	CL, GC, GM, ML	A-2, A-4, A-6	0-8	17-44	41-81	39-80	35-80	31-80	20-40	2-20
			31-33	Bedrock	—	—	—	—	—	—	—	—	—	—

Engineering Properties–Allegheny County, Pennsylvania														
Map unit symbol and soil name	Pct. of map unit	Hydrologic group	Depth	USDA texture	Classification		Fragments		Percentage passing sieve number—				Liquid limit	Plasticity index
					Unified	AASHTO	>10 inches	3-10 inches	4	10	40	200		
			In				*Pct*	*Pct*					*Pct*	
UCE—Urban land-Culleoka complex, steep														
Urban land	80		0-6	Variable	—	—	—	—	—	—	—	—	—	—
Culleoka	15	B	0-7	Silt loam	CL, CL-ML, ML	A-4	0	0-5	89-100	74-100	65-100	54-85	15-35	NP-10
			7-27	Channery silt loam, flaggy loam, silty clay loam	CL, CL-ML, ML	A-4, A-6	0	5-24	80-96	60-96	53-96	46-90	20-40	2-20
			27-29	Very flaggy clay loam, flaggy loam	CL, GC, GM, ML	A-2-6, A-4, A-6	0	11-50	57-98	10-98	8-98	6-82	20-40	2-20
			29-31	Bedrock	—	—	—	—	—	—	—	—	—	—
URC—Urban land-Rainsboro complex, sloping														
Urban land	75		0-6	Variable	—	—	—	—	—	—	—	—	—	—
Rainsboro	15	C	0-9	Silt loam	CL, CL-ML, ML	A-4, A-6	0	0	100	95-100	87-100	81-99	25-40	5-12
			9-26	Silt loam, silty clay loam	CL, CL-ML, ML	A-4, A-6, A-7	0	0	100	95-100	89-100	85-100	25-45	5-17
			26-40	Silt loam, silty clay loam	CL, CL-ML, ML	A-4, A-6, A-7	0	0	100	96-100	90-100	86-100	25-45	5-17
			40-60	Sandy clay loam, loam, gravelly clay loam	CL, CL-ML, SC, SC-SM	A-2, A-4, A-6	0	0-4	82-96	49-96	45-96	31-75	20-40	5-15
			60-72	Gravelly sandy loam, stratified gravelly sandy loam to clay loam	CL, CL-ML, SC, SC-SM	A-2, A-4, A-6	0	0-4	81-95	47-95	41-95	31-78	20-40	5-15

Particle Size and Coarse Fragments (Villas @ Winter Park, Pittsburgh, Pennsylvania)

This table shows estimates of particle size distribution and coarse fragment content of each soil in the survey area. The estimates are based on field observations and on test data for these and similar soils.

Depth to the upper and lower boundaries of each layer is indicated.

Particle size is the effective diameter of a soil particle as measured by sedimentation, sieving, or micrometric methods. Particle sizes are expressed as classes with specific effective diameter class limits. The broad classes are sand, silt, and clay, ranging from the larger to the smaller.

Sand as a soil separate consists of mineral soil particles that are 0.05 millimeter to 2 millimeters in diameter. In this table, the estimated sand content of each soil layer is given as a percentage, by weight, of the soil material that is less than 2 millimeters in diameter.

Silt as a soil separate consists of mineral soil particles that are 0.002 to 0.05 millimeter in diameter. In this table, the estimated silt content of each soil layer is given as a percentage, by weight, of the soil material that is less than 2 millimeters in diameter.

Clay as a soil separate consists of mineral soil particles that are less than 0.002 millimeter in diameter. In this table, the estimated clay content of each soil layer is given as a percentage, by weight, of the soil material that is less than 2 millimeters in diameter.

The content of sand, silt, and clay affects the physical behavior of a soil. Particle size is important for engineering and agronomic interpretations, for determination of soil hydrologic qualities, and for soil classification.

The amount and kind of clay affect the fertility and physical condition of the soil and the ability of the soil to adsorb cations and to retain moisture. They influence shrink-swell potential, saturated hydraulic conductivity (Ksat), plasticity, the ease of soil dispersion, and other soil properties. The amount and kind of clay in a soil also affect tillage and earthmoving operations.

Total fragments is the content of fragments of rock and other materials larger than 2 millimeters in diameter on volumetric basis of the whole soil.

Fragments 2-74 mm refers to the content of coarse fragments in the 2 to 74 millimeter size fraction.

Fragments 75-249 mm refers to the content of coarse fragments in teh 75 to 249 millimeter size fraction.

Fragments 250-599 mm refers to the content of coarse fragments in the 250 to 599 millimeter size fraction.

Fragments >=600 mm refers to the content of coarse fragments in the greater than or equal to 600 millimeter size fraction.

Reference:
United States Department of Agriculture, Natural Resources Conservation Service. National soil survey handbook, title 430-VI. (http://soils.usda.gov)

Particle Size and Coarse Fragments–Allegheny County, Pennsylvania										
Map symbol and soil name	**Horizon**	**Depth**	**Sand**	**Silt**	**Clay**	**Total fragments**	**Fragments 2-74 mm**	**Fragments 75-249 mm**	**Fragments 250-599 mm**	**Fragments >=600 mm**
		In	*L-RV-H Pct*	*L-RV-H Pct*	*L-RV-H Pct*	*RV Pct*	*RV Pct*	*RV Pct*	*RV Pct*	*RV Pct*
UCD—Urban land-Culleoka complex, moderately steep										
Urban land	—	—	—	—	—	—	—	—	—	—
Culleoka	Ap	0-10	-26-	-53-	15-21- 27	20	—	20	—	—
	Bt	10-26	-24-	-50-	18-26- 35	25	—	23	2	—
	C	26-31	-20-	-56-	18-24- 45	45	—	40	5	—
	R	31-33	—	—	—	—	—	—	—	—
UCE—Urban land-Culleoka complex, steep										
Urban land	H1	0-6	—	—	—	—	—	—	—	—
Culleoka	H1	0-7	-26-	-53-	15-21- 27	9	7	2	—	—
	H2	7-27	-19-	-54-	18-27- 35	22	13	9	—	—
	H3	27-29	-35-	-33-	18-32- 45	48	28	20	—	—
	H4	29-31	—	—	—	—	—	—	—	—
URC—Urban land-Rainsboro complex, sloping										
Urban land	H1	0-6	—	—	—	—	—	—	—	—
Rainsboro	H1	0-9	-11-	-69-	13-20- 27	2	2	—	—	—
	H2	9-26	- 7-	-67-	20-26- 32	2	2	—	—	—
	H3	26-40	- 7-	-67-	20-26- 32	2	2	—	—	—
	H4	40-60	-54-	-24-	15-23- 30	12	10	2	—	—
	H5	60-72	-63-	-14-	15-23- 30	24	22	2	—	—

Physical Soil Properties (Villas @ Winter Park, Pittsburgh, Pennsylvania)

This table shows estimates of some physical characteristics and features that affect soil behavior. These estimates are given for the layers of each soil in the survey area. The estimates are based on field observations and on test data for these and similar soils.

Depth to the upper and lower boundaries of each layer is indicated.

Particle size is the effective diameter of a soil particle as measured by sedimentation, sieving, or micrometric methods. Particle sizes are expressed as classes with specific effective diameter class limits. The broad classes are sand, silt, and clay, ranging from the larger to the smaller.

Sand as a soil separate consists of mineral soil particles that are 0.05 millimeter to 2 millimeters in diameter. In this table, the estimated sand content of each soil layer is given as a percentage, by weight, of the soil material that is less than 2 millimeters in diameter.

Silt as a soil separate consists of mineral soil particles that are 0.002 to 0.05 millimeter in diameter. In this table, the estimated silt content of each soil layer is given as a percentage, by weight, of the soil material that is less than 2 millimeters in diameter.

Clay as a soil separate consists of mineral soil particles that are less than 0.002 millimeter in diameter. In this table, the estimated clay content of each soil layer is given as a percentage, by weight, of the soil material that is less than 2 millimeters in diameter.

The content of sand, silt, and clay affects the physical behavior of a soil. Particle size is important for engineering and agronomic interpretations, for determination of soil hydrologic qualities, and for soil classification.

The amount and kind of clay affect the fertility and physical condition of the soil and the ability of the soil to adsorb cations and to retain moisture. They influence shrink-swell potential, saturated hydraulic conductivity (Ksat), plasticity, the ease of soil dispersion, and other soil properties. The amount and kind of clay in a soil also affect tillage and earthmoving operations.

Moist bulk density is the weight of soil (ovendry) per unit volume. Volume is measured when the soil is at field moisture capacity, that is, the moisture content at 1/3- or 1/10-bar (33kPa or 10kPa) moisture tension. Weight is determined after the soil is dried at 105 degrees C. In the table, the estimated moist bulk density of each soil horizon is expressed in grams per cubic centimeter of soil material that is less than 2 millimeters in diameter. Bulk density data are used to compute linear extensibility, shrink-swell potential, available water capacity, total pore space, and other soil properties. The moist bulk density of a soil indicates the pore space available for water and roots. Depending on soil texture, a bulk density of more than 1.4 can restrict water storage and root penetration. Moist bulk density is influenced by texture, kind of clay, content of organic matter, and soil structure.

Saturated hydraulic conductivity (Ksat) refers to the ease with which pores in a saturated soil transmit water. The estimates in the table are expressed in terms of micrometers per second. They are based on soil characteristics observed in the field, particularly structure, porosity, and texture. Saturated hydraulic conductivity (Ksat) is considered in the design of soil drainage systems and septic tank absorption fields.

Available water capacity refers to the quantity of water that the soil is capable of storing for use by plants. The capacity for water storage is given in inches of water per inch of soil for each soil layer. The capacity varies, depending on soil properties that affect retention of water. The most important properties are the content of organic matter, soil texture, bulk density, and soil structure. Available water capacity is an important factor in the choice of plants or crops to be grown and in the design and management of irrigation systems. Available water capacity is not an estimate of the quantity of water actually available to plants at any given time.

Linear extensibility refers to the change in length of an unconfined clod as moisture content is decreased from a moist to a dry state. It is an expression of the volume change between the water content of the clod at 1/3- or 1/10-bar tension (33kPa or 10kPa tension) and oven dryness. The volume change is reported in the table as percent change for the whole soil. The amount and type of clay minerals in the soil influence volume change.

Linear extensibility is used to determine the shrink-swell potential of soils. The shrink-swell potential is low if the soil has a linear extensibility of less than 3 percent; moderate if 3 to 6 percent; high if 6 to 9 percent; and very high if more than 9 percent. If the linear extensibility is more than 3, shrinking and swelling can cause damage to buildings, roads, and other structures and to plant roots. Special design commonly is needed.

Organic matter is the plant and animal residue in the soil at various stages of decomposition. In this table, the estimated content of organic matter is expressed as a percentage, by weight, of the soil material that is less than 2 millimeters in diameter. The content of organic matter in a soil can be maintained by returning crop residue to the soil.

Organic matter has a positive effect on available water capacity, water infiltration, soil organism activity, and tilth. It is a source of nitrogen and other nutrients for crops and soil organisms.

Erosion factors are shown in the table as the K factor (Kw and Kf) and the T factor. Erosion factor K indicates the susceptibility of a soil to sheet and rill erosion by water. Factor K is one of six factors used in the Universal Soil Loss Equation (USLE) and the Revised Universal Soil Loss Equation (RUSLE) to predict the average annual rate of soil loss by sheet and rill erosion in tons per acre per year. The estimates are based primarily on percentage of silt, sand, and organic matter and on soil structure and Ksat. Values of K range from 0.02 to 0.69. Other factors being equal, the higher the value, the more susceptible the soil is to sheet and rill erosion by water.

Erosion factor Kw indicates the erodibility of the whole soil. The estimates are modified by the presence of rock fragments.

Erosion factor Kf indicates the erodibility of the fine-earth fraction, or the material less than 2 millimeters in size.

Erosion factor T is an estimate of the maximum average annual rate of soil erosion by wind and/or water that can occur without affecting crop productivity over a sustained period. The rate is in tons per acre per year.

Wind erodibility groups are made up of soils that have similar properties affecting their susceptibility to wind erosion in cultivated areas. The soils assigned to group 1 are the most susceptible to wind erosion, and those assigned to group 8 are the least susceptible. The groups are described in the "National Soil Survey Handbook."

Wind erodibility index is a numerical value indicating the susceptibility of soil to wind erosion, or the tons per acre per year that can be expected to be lost to wind erosion.

There is a close correlation between wind erosion and the texture of the surface layer, the size and durability of surface clods, rock fragments, organic matter, and a calcareous reaction. Soil moisture and frozen soil layers also influence wind erosion.

Reference:
United States Department of Agriculture, Natural Resources Conservation Service. National soil survey handbook, title 430-VI. (http://soils.usda.gov)

Physical Soil Properties–Allegheny County, Pennsylvania														
Map symbol and soil name	Depth	Sand	Silt	Clay	Moist bulk density	Saturated hydraulic conductivity	Available water capacity	Linear extensibility	Organic matter	Erosion factors			Wind erodibility group	Wind erodibility index
										Kw	Kf	T		
	In	*Pct*	*Pct*	*Pct*	*g/cc*	*micro m/sec*	*In/In*	*Pct*	*Pct*					
UCD—Urban land-Culleoka complex, moderately steep														
Urban land	—	—	—	—	—	—	—	—	—					
Culleoka	0-10	-26-	-53-	15-21- 27	1.20-1.40	4.23-42.34	0.14-0.20	0.0-2.9	1.0-4.0	.20	.32	2	7	38
	10-26	-24-	-50-	18-26- 35	1.20-1.50	4.23-42.34	0.12-0.20	0.0-2.9	0.1-0.8	.20	.37			
	26-31	-20-	-56-	18-24- 45	1.20-1.50	4.23-42.34	0.05-0.14	0.0-2.9	0.0-0.5	.15	.49			
	31-33	—	—	—	—	0.00-14.11	—	—	—					
UCE—Urban land-Culleoka complex, steep														
Urban land	0-6	—	—	—	—	—	—	—	—					
Culleoka	0-7	-26-	-53-	15-21- 27	1.20-1.40	4.23-42.34	0.14-0.20	0.0-2.9	1.0-4.0	.28	.28	2	6	48
	7-27	-19-	-54-	18-27- 35	1.20-1.50	4.23-42.34	0.12-0.20	0.0-2.9	0.0-0.5	.24	.43			
	27-29	-35-	-33-	18-32- 45	1.20-1.50	4.23-42.34	0.05-0.14	0.0-2.9	0.0-0.5	.10	.28			
	29-31	—	—	—	—	0.00-14.11	—	—	—					

Physical Soil Properties–Allegheny County, Pennsylvania														
Map symbol and soil name	Depth	Sand	Silt	Clay	Moist bulk density	Saturated hydraulic conductivity	Available water capacity	Linear extensibility	Organic matter	Erosion factors			Wind erodibility group	Wind erodibility index
										Kw	Kf	T		
	In	*Pct*	*Pct*	*Pct*	*g/cc*	*micro m/sec*	*In/In*	*Pct*	*Pct*					
URC—Urban land-Rainsboro complex, sloping														
Urban land	0-6	—	—	—	—	—	—	—	—					
Rainsboro	0-9	-11-	-69-	13-20- 27	1.40-1.55	4.23-14.11	0.22-0.24	0.0-2.9	1.0-3.0	.37	.37	5	6	48
	9-26	- 7-	-67-	20-26- 32	1.40-1.60	1.41-14.11	0.18-0.22	3.0-5.9	0.1-0.5	.49	.49			
	26-40	- 7-	-67-	20-26- 32	1.70-1.90	0.42-4.23	0.12-0.16	3.0-5.9	0.1-0.5	.49	.49			
	40-60	-54-	-24-	15-23- 30	1.70-1.90	0.42-4.23	0.09-0.15	0.0-2.9	0.1-0.5	.49	.49			
	60-72	-63-	-14-	15-23- 30	1.55-1.75	4.23-42.34	0.12-0.17	0.0-2.9	0.1-0.5	.10	.17			

Soil Qualities and Features

This folder contains tabular reports that present various soil qualities and features. The reports (tables) include all selected map units and components for each map unit. Soil qualities are behavior and performance attributes that are not directly measured, but are inferred from observations of dynamic conditions and from soil properties. Example soil qualities include natural drainage, and frost action. Soil features are attributes that are not directly part of the soil. Example soil features include slope and depth to restrictive layer. These features can greatly impact the use and management of the soil.

Soil Features (Villas @ Winter Park, Pittsburgh, Pennsylvania)

This table gives estimates of various soil features. The estimates are used in land use planning that involves engineering considerations.

A *restrictive layer* is a nearly continuous layer that has one or more physical, chemical, or thermal properties that significantly impede the movement of water and air through the soil or that restrict roots or otherwise provide an unfavorable root environment. Examples are bedrock, cemented layers, dense layers, and frozen layers. The table indicates the hardness and thickness of the restrictive layer, both of which significantly affect the ease of excavation. *Depth to top* is the vertical distance from the soil surface to the upper boundary of the restrictive layer.

Subsidence is the settlement of organic soils or of saturated mineral soils of very low density. Subsidence generally results from either desiccation and shrinkage, or oxidation of organic material, or both, following drainage. Subsidence takes place gradually, usually over a period of several years. The table shows the expected initial subsidence, which usually is a result of drainage, and total subsidence, which results from a combination of factors.

Potential for frost action is the likelihood of upward or lateral expansion of the soil caused by the formation of segregated ice lenses (frost heave) and the subsequent collapse of the soil and loss of strength on thawing. Frost action occurs when moisture moves into the freezing zone of the soil. Temperature, texture, density, saturated hydraulic conductivity (Ksat), content of organic matter, and depth to the water table are the most important factors considered in evaluating the potential for frost action. It is assumed that the soil is not insulated by vegetation or snow and is not artificially drained. Silty and highly structured, clayey soils that have a high water table in winter are the most susceptible to frost action. Well drained, very gravelly, or very sandy soils are the least susceptible. Frost heave and low soil strength during thawing cause damage to pavements and other rigid structures.

Risk of corrosion pertains to potential soil-induced electrochemical or chemical action that corrodes or weakens uncoated steel or concrete. The rate of corrosion of uncoated steel is related to such factors as soil moisture, particle-size distribution, acidity, and electrical conductivity of the soil. The rate of corrosion of concrete is based mainly on the sulfate and sodium content, texture, moisture content, and acidity of the soil. Special site examination and design may be needed if the combination of factors results in a severe hazard of corrosion. The steel or concrete in installations that intersect soil boundaries or soil layers is more susceptible to corrosion than the steel

or concrete in installations that are entirely within one kind of soil or within one soil layer.

For uncoated steel, the risk of corrosion, expressed as *low*, *moderate*, or *high*, is based on soil drainage class, total acidity, electrical resistivity near field capacity, and electrical conductivity of the saturation extract.

For concrete, the risk of corrosion also is expressed as *low*, *moderate*, or *high.* It is based on soil texture, acidity, and amount of sulfates in the saturation extract.

Soil Features–Allegheny County, Pennsylvania									
Map symbol and soil name	Restrictive Layer				Subsidence		Potential for frost action	Risk of corrosion	
	Kind	Depth to top	Thickness	Hardness	Initial	Total		Uncoated steel	Concrete
		In	*In*		*In*	*In*			
UCD—Urban land-Culleoka complex, moderately steep									
Urban land		—	—		0	—	None		
Culleoka	Lithic bedrock	20-40	—	Indurated	0	—	Low	Low	Moderate
UCE—Urban land-Culleoka complex, steep									
Urban land		10	—		—	—			
Culleoka	Lithic bedrock	20-40	—	Indurated	—	—		Low	Moderate
URC—Urban land-Rainsboro complex, sloping									
Urban land		10	—		—	—			
Rainsboro		—	—		—	—	High	High	Moderate

References

American Association of State Highway and Transportation Officials (AASHTO). 2004. Standard specifications for transportation materials and methods of sampling and testing. 24th edition.

American Society for Testing and Materials (ASTM). 2005. Standard classification of soils for engineering purposes. ASTM Standard D2487-00.

Cowardin, L.M., V. Carter, F.C. Golet, and E.T. LaRoe. 1979. Classification of wetlands and deep-water habitats of the United States. U.S. Fish and Wildlife Service FWS/OBS-79/31.

Federal Register. July 13, 1994. Changes in hydric soils of the United States.

Federal Register. September 18, 2002. Hydric soils of the United States.

Hurt, G.W., and L.M. Vasilas, editors. Version 6.0, 2006. Field indicators of hydric soils in the United States.

National Research Council. 1995. Wetlands: Characteristics and boundaries.

Soil Survey Division Staff. 1993. Soil survey manual. Soil Conservation Service. U.S. Department of Agriculture Handbook 18. http://www.nrcs.usda.gov/wps/portal/nrcs/detail/national/soils/?cid=nrcs142p2_054262

Soil Survey Staff. 1999. Soil taxonomy: A basic system of soil classification for making and interpreting soil surveys. 2nd edition. Natural Resources Conservation Service, U.S. Department of Agriculture Handbook 436. http://www.nrcs.usda.gov/wps/portal/nrcs/detail/national/soils/?cid=nrcs142p2_053577

Soil Survey Staff. 2010. Keys to soil taxonomy. 11th edition. U.S. Department of Agriculture, Natural Resources Conservation Service. http://www.nrcs.usda.gov/wps/portal/nrcs/detail/national/soils/?cid=nrcs142p2_053580

Tiner, R.W., Jr. 1985. Wetlands of Delaware. U.S. Fish and Wildlife Service and Delaware Department of Natural Resources and Environmental Control, Wetlands Section.

United States Army Corps of Engineers, Environmental Laboratory. 1987. Corps of Engineers wetlands delineation manual. Waterways Experiment Station Technical Report Y-87-1.

United States Department of Agriculture, Natural Resources Conservation Service. National forestry manual. http://www.nrcs.usda.gov/wps/portal/nrcs/detail/soils/home/?cid=nrcs142p2_053374

United States Department of Agriculture, Natural Resources Conservation Service. National range and pasture handbook. http://www.nrcs.usda.gov/wps/portal/nrcs/detail/national/landuse/rangepasture/?cid=stelprdb1043084

United States Department of Agriculture, Natural Resources Conservation Service. National soil survey handbook, title 430-VI. http://www.nrcs.usda.gov/wps/portal/nrcs/detail/soils/scientists/?cid=nrcs142p2_054242

United States Department of Agriculture, Natural Resources Conservation Service. 2006. Land resource regions and major land resource areas of the United States, the Caribbean, and the Pacific Basin. U.S. Department of Agriculture Handbook 296. http://www.nrcs.usda.gov/wps/portal/nrcs/detail/national/soils/?cid=nrcs142p2_053624

United States Department of Agriculture, Soil Conservation Service. 1961. Land capability classification. U.S. Department of Agriculture Handbook 210. http://www.nrcs.usda.gov/Internet/FSE_DOCUMENTS/nrcs142p2_052290.pdf

Appendix C
Retaining Wall Calculations

Calculation Brief
Preliminary Retaining Wall Stability Analysis
Villas at Winter Park
20th Ward, City of Pittsburgh, Pennsylvania

Purpose:

The purpose of this calculation is to determine, on a preliminary basis, the magnitude of a retaining wall "system" that will need to be employed to facilitate the construction of the infrastructure and residences at the proposed Villas at Winter Park development. The site is located in a Steep Slope District above the South Side area of the City of Pittsburgh. Development of the site requires excavation into the native soil and geology of the slope of the parcel. This in turn will require the installation of retaining structures in specific locations to minimize the amount of disturbance at the site.

Background:

A geotechnical investigation of the property was conducted by KU Resources, Inc. in January 2015. A total of 10 borings were drilled across the property within the proposed band of construction across the slope. The borings where drilled in the areas behind the proposed residences, in areas where residences and infrastructure will installed, and in locations at the downgradient limits of the development.

In general, the investigation determined that the geology of the area consists of shale bedrock, overlain by a veneer of silty clay and clay soil with a thin topsoil zone. Within the shale bedrock a zone of reddish shale and claystone was observed. Based upon the known geologic strata of the region and the position of the Pittsburgh Coal Seam higher on the ridgeline, this unit is not part of the notorious "Pittsburgh Red Beds" associated with extensive landsliding throughout Western Pennsylvania. However, due to the presence of iron within the matrix, this material can have weaker properties than the surrounding shale units and can be subject to excessive erosion when exposed directly to weathering.

Approach:

Many types of retaining walls could be utilized at this location, ranging from concrete gravity and cantilever walls, to large block gravity structures, to soldier beam and lagging. For aesthetic reasons, we examined the viability of using a segmented block wall system such as a Keystone Retaining Wall. Other wall system(s) may ultimately be employed as overall planning of the development occurs. As the preliminary wall set has been found to be stable, other wall systems will also be stable. The variant will be construction arrangement to meet the parameters presented by the site conditions.

Assigned Material Properties:

1. For slope stability analysis and lateral earth pressures, the overlying soil and weathered bedrock zone will be conservatively considered to have the same properties.
2. The internal angle of friction of the soil zone present at the site, Φ, will be the slope angle of the development in the area of wall construction. This represents the natural angle of repose of the material, sans any cohesive attributes in the near surface portion subjected to natural freeze-thaw conditions.
3. For bearing capacity and base sliding evaluation, the underlying foundation material (less weathered fractured bedrock) will be conservatively considered to have the properties of a dense aggregate within a fine-grained matrix.

4. The materials have been assigned the following properties based upon the conditions identified through the geotechnical investigation, common characteristic of the soil and rock types within this region of the Commonwealth, and best engineering judgement based upon years of experience in this field:

Native Soil:

Friction Angle: 26.57 Degrees
Cohesion: 50 PSF
Unit Weight: 120 PCF

Recompacted Fill:

Friction Angle: 28 Degrees
Cohesion: 100 PSF
Unit Weight: 120 PCF

Highly Weathered Bedrock:

Friction Angle: 26.57 Degrees
Cohesion: 50 PSF
Unit Weight: 120 PCF

Foundation Bedrock:

Friction Angle: 38 Degrees
Cohesion: 50 PSF
Unit Weight: 130 PCF

Aggregate Backfill:

Friction Angle: 34 Degrees
Cohesion: 0 PSF
Unit Weight: 110 PCF

<u>Solution</u>:

A typical wall section will appear as follows:

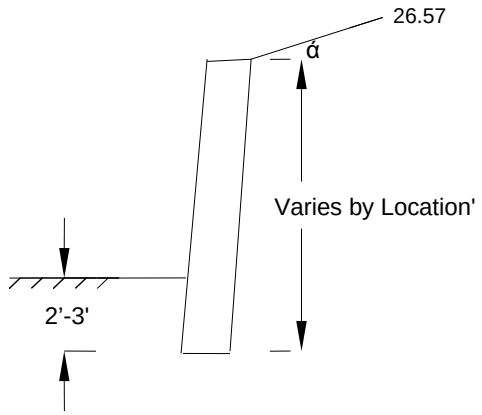

Hackstown Road Extension Assessment

For the preliminary assessment, nine wall sections representing the site conditions were evaluated These are shown on Drawing C-405. The analysis was performed utilizing the Keystone Retaining Wall Systems Keywall® analysis program. The subject wall sections were designed as indicated in the attachments to have the following factors of safety against the particular mode of failure. Per standard industry practice, any Factor of Safety at or above 1.5 is considered acceptable.

I) Section 1

3 *foot wall exposure – Parking Area at Hackstown Street Extension*

Sliding	3.81
Overturning	6.51
Bearing	54.42
Shear	13.74
Bending	5.88

10 foot wall exposure – Upper Wall at Parking Area at Hackstown Street Extension

Sliding	1.53
Overturning	2.76
Bearing	25.67
Shear	6.23
Bending	4.46

3 foot wall exposure – Roadway Embankment of Hackstown Street Extension

Sliding	1.70
Overturning	2.73
Bearing	34.37
Shear	10.77
Bending	4.12

II) Section 2

5 foot wall exposure – Wall Behind Residence of Hackstown Street Extension

Sliding	1.51
Overturning	2.70
Bearing	33.70
Shear	10.77
Bending	4.12

8 foot wall exposure – Roadway Embankment of Hackstown Street Extension

Sliding	1.52
Overturning	2.26
Bearing	21.96
Shear	7.32
Bending	4.31

III) Section 3

3 foot wall exposure – Wall Behind Residence of Hackstown Street Extension

Sliding	1.51
Overturning	2.70
Bearing	33.70
Shear	10.77
Bending	4.12

7 foot wall exposure – Roadway Embankment of Hackstown Street Extension

Sliding	1.52
Overturning	2.29
Bearing	23.35
Shear	7.03
Bending	3.86

IV) Section 4

5 foot wall exposure – Wall Behind Residence of Hackstown Street Extension

Sliding	1.51
Overturning	2.70
Bearing	33.70
Shear	10.77
Bending	4.12

10 foot wall exposure – Roadway Embankment of Hackstown Street Extension

Sliding	1.50
Overturning	2.04
Bearing	18.45
Shear	6.82
Bending	3.75

V) Section 5

10 foot wall exposure – Lower Wall Behind Residence of Magdalene Street Extension

Sliding	1.56
Overturning	2.42
Bearing	24.98
Shear	6.65
Bending	4.44

3.75 foot wall exposure – Upper Wall Behind Residence of Magdalene Street Extension

Sliding	1.51
Overturning	2.73
Bearing	31.76
Shear	7.85
Bending	4.62

7 foot wall exposure – Roadway Embankment of Magdalene Street Extension

Sliding	1.52
Overturning	2.29
Bearing	23.35
Shear	7.03
Bending	3.86

VI) Section 6

10 foot wall exposure – Lower Wall Behind Residence of Magdalene Street Extension

Sliding	1.56
Overturning	2.42
Bearing	24.98
Shear	6.65
Bending	4.44

2.5 foot wall exposure – Upper Wall Behind Residence of Magdalene Street Extension

Sliding	1.73
Overturning	3.59
Bearing	41.38
Shear	11.76
Bending	5.03

VII) Section 7

10 foot wall exposure – Lower Wall Behind Residence of Magdalene Street Extension

Sliding	1.56
Overturning	2.42
Bearing	24.98
Shear	6.65
Bending	4.44

3.75 foot wall exposure – Upper Wall Behind Residence of Magdalene Street Extension

Sliding	1.51
Overturning	2.73
Bearing	31.76
Shear	7.85
Bending	4.62

7 foot wall exposure – Roadway Embankment of Magdalene Street Extension

Sliding	1.52
Overturning	2.29
Bearing	23.35
Shear	7.03
Bending	3.86

VIII) Section 8

8 foot wall exposure – Wall Behind Residence of Gregory Street

Sliding	1.59
Overturning	2.59
Bearing	26.29
Shear	7.58
Bending	4.46

IX) Section 9

6 foot wall exposure – Wall Behind Residence of Gregory Street

Sliding	1.52
Overturning	2.26
Bearing	21.96
Shear	7.32
Bending	4.31

X) Between Hammerheads

10 foot wall exposure

Sliding	2.29
Overturning	3.27
Bearing	27.47
Shear	7.51
Bending	5.12

5 foot wall exposure

Sliding	2.69
Overturning	4.00
Bearing	35.14
Shear	9.31
Bending	5.12

Summary / Conclusion:

The analysis indicates that retaining walls can be constructed across the slope to facilitate the development. The calculations demonstrate that the walls will have a suitable factor of safety against failure.

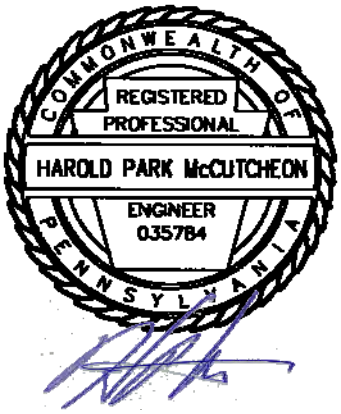

ATTACHMENT A
KEYWALL® DESIGN MODEL OUTPUT

RETAINING WALL DESIGN

KeyWall_2012 Version 3.7.2 Build 16

Project: *Villas at Winter Park*
Project No: *SCI14100CSD*
Case: *Case 1*
Design Method: *Rankine-w/Batter (modified soil interface)*

Date: *3/25/2016*
Designer: *H. McCutcheon*

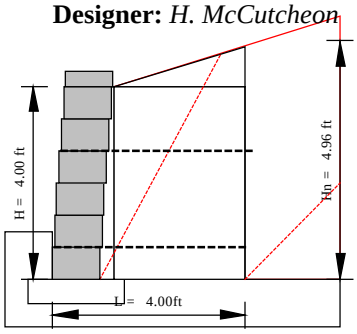

Design Parameters

Soil Parameters:	**ϕ deg**	**c psf**	**γ pcf**
Reinforced Fill	*34*	*0*	*110*
Retained Zone	*27*	*50*	*120*
Foundation Soil	*38*	*50*	*130*

Reinforced Fill Type: *2.5" minus Crushed Stone or Gravel*
Unit Fill: *Crushed Stone, 1 inch minus*

Minimum Design Factors of Safety

sliding:	1.50	pullout:	1.50	uncertainties:	1.50
overturning:	1.50	shear:	1.50	connection:	1.50
bearing:	1.50	bending:	1.50		

Design Preferences

Reinforcing Parameters: *Strata-Grid Geogrids*

	Tult	*RFcr*	*RFd*	*RFid*	*LTDS*	*FS*	*Tal*	*Ci*	*Cds*
SG150	*1875*	*1.65*	*1.10*	*1.35*	*765*	*1.50*	*510*	*0.90*	*0.90*

Analysis: ***Case: Case 1***

3' Lower Wall at Hackstown Street Extension Parking Area

Unit Type:	*CompacIII / 120.00 pcf*	*Wall Batter: 4.00 deg (Hinge Ht N/A)*
Leveling Pad:	*Crushed Stone*	
Wall Ht:	*4.00 ft*	*embedment: 1.00 ft*
BackSlope:	*17.33 deg. slope,*	*30.00 ft long*
Surcharge:	*LL: 0 psf uniform surcharge*	*DL: 500 psf uniform surcharge*
	Load Width: 0.00 ft	*Load Width: 50.00 ft*

Results:	***Sliding***	***Overturning***	***Bearing***	***Shear***	***Bending***
Factors of Safety:	*3.18*	*6.51*	*54.42*	*13.74*	*5.88*

Calculated Bearing Pressure: *533 / 533 psf*
Eccentricity at base: 0.07 ft
Reinforcing: (ft & lbs/ft)

Layer	**Height**	**Length**	**Calc. Tension**	**Reinf. Type**	**Allow Ten Tal**	**Pk Conn Tcl**	**Pullout FS**
2	*2.67*	*4.0*	*82*	*SG150*	*510 ok*	*531 ok*	*5.84 ok*
1	*0.67*	*4.0*	*159*	*SG150*	*510 ok*	*576 ok*	*8.65 ok*

Reinforcing Quantities (no waste included):
SG150 0.89 sy/ft

NOTE: THESE CALCULATIONS ARE FOR PRELIMINARY DESIGN ONLY AND SHOULD NOT BE USED FOR CONSTRUCTION WITHOUT REVIEW BY A QUALIFIED ENGINEER

DETAILED CALCULATIONS

Project: *Villas at Winter Park* **Date:** *3/25/2016*
Project No: *SCI14100CSD* **Designer:** *H. McCutcheon*
Case: *Case 1*
Design Method: *Rankine-w/Batter (modified soil interface)*

Soil Parameters:	**ϕ deg**	**c psf**	**γ pcf**
Reinforced Fill	*34*	*0*	*110*
Retained Zone	*27*	*50*	*120*
Foundation Soil	*38*	*50*	*130*

Leveling Pad: ***Crushed Stone***

Modular Concrete Unit: *CompacIII*
Depth: *1.00 ft* **In-Place Wt:** *120 pcf*

Geometry

Internal Stability
(Sloping geometry)
Height: 4.00 ft
BackSlope:
Angle: 17.3 deg
Height: 9.36 ft
Batter: 4.00deg
Surcharge:
Dead Load: 500.00 psf
Live Load: 0 psf
Base width: 4.0 ft

External Stability
(Sloping geometry)
Height: 4.96 ft
Angle: 17.3 deg
Height: 8.40 ft
Batter: 4.00deg
Dead Load: 500.00 psf
Live Load:0 psf

Earth Pressures:

$$k_a = \frac{\sin^2(\alpha+\phi)}{\sin^2\alpha\,\sin(\alpha-\delta)\left[1+\sqrt{\frac{\sin(\phi+\delta)\sin(\phi-\beta)}{\sin(\alpha-\delta)\sin(\alpha+\beta)}}\right]^2}$$

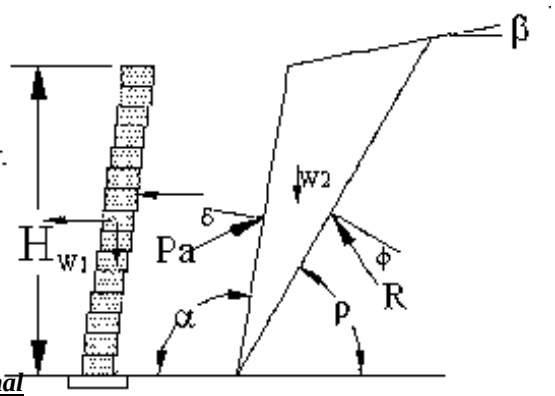

Internal		***External***	
ϕ	= 34 deg	ϕ	= 27 deg
α	= 94.00 deg	α	= 94.00 deg
β	= 17.33 deg	β	= 17.33 deg
δ	= 17.33 deg	δ	= 17.33 deg
H	= 4.00 ft		
ka	= 0.286	ka	= 0.420

Hinge Height: Hinge Ht= Not applicable

Reinforcing Parameters: *Strata-Grid Geogrids*

	Tult	RFcr	RFd	RFid	LTDS	FS	Tal	Ci	Cds
SG150	*1875*	*1.65*	*1.10*	*1.35*	*765*	*1.50*	*510*	*0.90*	*0.90*

Connection Parameters: Strata-Grid Geogrids

	Frictional 1	Break Pt	Frictional 2
SG150	*Tcl= Ntan(16.00) + 750*	*1609*	*Tcl= Ntan(0.00) +1211*

Unit Shear Data

Shear = N tan(40.00)
Inter-Unit ShearShear = N tan(34.00) + 900.00

Calculated Reactions

For the "modified" design method, the back of the mass assumed to be vertical for calculation of resisting forces.
effective sliding length = 4.00 ft

$Pa := 0.5H\cdot(\gamma\cdot H\cdot ka - 2c\cdot\sqrt{ka})$ $\quad P_q := q\cdot H\cdot ka$

$Pa_h := Pa\cdot\cos(\delta)$ $\quad Pq_h := P_q\cdot\cos(\delta)$

$Pa_v := Pa\cdot\sin(\delta)$ $\quad Pq_v := P_q\cdot\sin(\delta)$

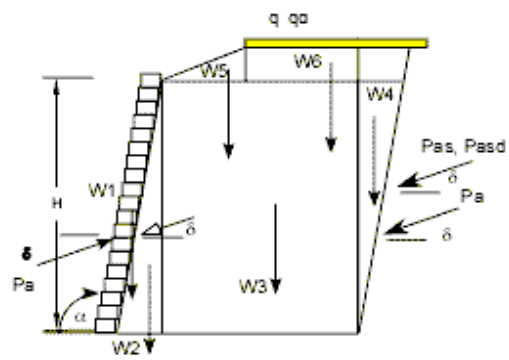

Reactions are:

Area	Force	Arm-x	Arm-y	Moment
W1	*480.00*	*[0.640]*	*2.000*	*307.13*
W2	*61.54*	*[1.186]*	*1.333*	*73.01*
W3	*1196.93*	*[2.640]*	*2.000*	*3159.72*
W5	*138.55*	*[3.093]*	*4.283*	*428.55*
Pa_h	*437.49*	*4.000*	*[1.652]*	*-722.89*
Pa_v	*184.35*	*[4.000]*	*1.652*	*737.40*
Sum V =	*2061.36*		*Sum Mr =*	*4705.81*
Sum H =	*437.49*		*Sum Mo =*	*-722.89*

Calculate Sliding at Base

For Sliding, Vertical Force = W1+W2+W3+W4+W5+W6+qd	= 2061
The resisting force within the rein. mass , Rf_1	= N tan(34)
	= 1390
The resisting force at the foundation, Rf_2	= N tan(38) + (4.00 x 50.00)
	= 1811
The driving forces, Df, are the sum of the external earth pressures:	
Pa_h + Pql_h + Pqd_h	= 437
the Factor of Safety for Sliding is Rf_1/Df	= 3.18

Calculate Overturning:

Overturning moment: Mo = Sum Mo	= -723
Resisting moment: Mr = Sum Mr	= 4706
Factor of Safety of Overturning: Mr/Mo	= 6.51

Calculate eccentricity at base: with Surcharge / without Surcharge
Sum Moments = 3983 / 3983
Sum Vertical = 2061/2061
Base Length = 4.00
e = 0.068 / 0.068

Calculate Ultimate Bearing based on shear:
where:

Nq = 48.93
Nc = 61.35
Ng = 78.02 (ref. Vesic(1973, 1975) eqns)
Qult = 29027 psf

Equivalent footing width, B' = L -2e = 3.86 / 3.86
Bearing pressure = sumV/B' = 533 psf / 533 psf [bearing is greatest without liveload]
Factor of Safety for bearing = Qult/bearing= 54.42

Calculate Tensions in Reinforcing:
The tensions in the reinforcing layer, and the assumed load at the connection,
is the vertical area supported by each respective layer, Sv.Column [7] is '2c sqrt(ka)'.

Table of Results ppf

[1]	[2]	[3]	[4]	[5]	[6]	[7]	[8]	[9]	[10]	[11]
Layer	Depth zi	h1	ka/rho	Pa	(Pas+Pasd)	c	(5+6)cos(d)-7	Ti	Tcl	Tsc
2	1.33	1.17	0.286/53	86	0	0	82	82	531	N/A
1	3.33	3.17	0.286/53	166	0	0	159	159	576	N/A

Calculate sliding on the reinforcing:

The shear value is the lessor of base-shear or inter-unit shear.

[1]	[2]	[3]	[4]	[5]	[6]	[7]	[8]	[9]	[10]	[11]	[12]
Layer	Depth zi	N	Li	Cds	τ	RF	ka	Pa	Pas+Pasd	DF	FS
2	*1.33*	*621*	*3.00*	*0.90*	*1008*	*1385*	*0.420*	*132*	*0*	*55*	*25.04*
1	*3.33*	*1336*	*3.00*	*0.90*	*1170*	*1981*	*0.420*	*464*	*0*	*310*	*6.39*

Calculate pullout of each layer

The FoS (R*/S*) of pullout is calculated as the individual
layer pullout (Rf) divided by the tension (Df) in that layer.
The angle of the failure plane is: 28.00 degrees from vertical.

[1]	[2]	[3]	[4]	[5]	[6]	[7]	[8]
Layer	Depth zi	Le	SumV	Ci	POi	Ti	FS_PO
2	*1.33*	*1.77*	*393*	*0.90*	*478*	*82*	*5.84*
1	*3.33*	*2.69*	*1130*	*0.90*	*1372*	*159*	*8.65*

Check Shear & Bending at each layer

Bending on the top layer is the FOS of overturning of the Units
(Most surcharge loads need to be moved back from the face.)

[1]	*[2]*	*[3]*	*[4]*	*[5]*	*[6]*	*[7]*	*[8]*	*[9]*	
Layer	*Depth zi*	*Si*	*DM*	*Pv*	*RM*	*FS_b*	*DS*	*RS*	*FS_Sh*
2	*1.33*	*1.33*	*12*	*160*	*87*	*7.37*	*27*	*1008*	*37.74*
1	*3.33*	*2.00*	*40*	*280*	*235*	*5.88*	*85*	*1170*	*13.74*

RETAINING WALL DESIGN

KeyWall_2012 Version 3.7.2 Build 16

Project: *Villas at Winter Park*
Project No: *SCI14100CSD*
Case: *Case 2*
Design Method: *Rankine-w/Batter (modified soil interface)*

Date: *3/25/2016*
Designer: *H. McCutcheon*

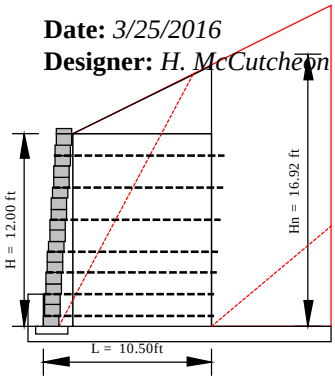

Design Parameters

Soil Parameters:

	ϕ deg	c psf	γ pcf
Reinforced Fill	*34*	*0*	*110*
Retained Zone	*27*	*50*	*120*
Foundation Soil	*38*	*50*	*130*

Reinforced Fill Type: *2.5" minus Crushed Stone or Gravel*
Unit Fill: *Crushed Stone, 1 inch minus*

Minimum Design Factors of Safety

sliding:	1.50	pullout:	1.50	uncertainties:	1.50
overturning:	1.50	shear:	1.50	connection:	1.50
bearing:	1.50	bending:	1.50		

Design Preferences

Reinforcing Parameters: *Strata-Grid Geogrids*

	Tult	RFcr	RFd	RFid	LTDS	FS	Tal	Ci	Cds
SG200	*3600*	*1.55*	*1.10*	*1.35*	*1564*	*1.50*	*1043*	*0.90*	*0.90*
SG150	*1875*	*1.65*	*1.10*	*1.35*	*765*	*1.50*	*510*	*0.90*	*0.90*

Analysis: ***Case: Case 2***
10' Upper Wall at Hackstown Street Extension Parking Area

Unit Type:	*CompacIII / 120.00 pcf*	*Wall Batter: 4.00 deg (Hinge Ht N/A)*
Leveling Pad:	*Crushed Stone*	
Wall Ht:	*12.00 ft*	*embedment: 2.00 ft*
BackSlope:	*26.57 deg. slope,*	*50.00 ft long*
Surcharge:	*LL: 0 psf uniform surcharge*	*DL: 0 psf uniform surcharge*
	Load Width: 0.00 ft	*Load Width: 0.00 ft*

Results:

	Sliding	Overturning	Bearing	Shear	Bending
Factors of Safety:	*1.53*	*2.76*	*25.67*	*6.23*	*4.46*

Calculated Bearing Pressure: *2342 / 2342 psf*
Eccentricity at base: 0.88 ft
Reinforcing: (ft & lbs/ft)

Layer	Height	Length	Calc. Tension	Reinf. Type	Allow Ten Tal	Pk Conn Tcl	Pullout FS
7	*10.67*	*10.5*	*96*	*SG150*	*510 ok*	*531 ok*	*>10 ok*
6	*8.67*	*10.5*	*234*	*SG150*	*510 ok*	*576 ok*	*>10 ok*
5	*6.67*	*10.5*	*374*	*SG150*	*510 ok*	*622 ok*	*>10 ok*
4	*4.67*	*10.5*	*419*	*SG150*	*510 ok*	*668 ok*	*>10 ok*
3	*3.33*	*10.5*	*406*	*SG150*	*510 ok*	*699 ok*	*>10 ok*
2	*2.00*	*10.5*	*468*	*SG150*	*510 ok*	*729 ok*	*>10 ok*
1	*0.67*	*10.5*	*530*	*SG200*	*1043 ok*	*1232 ok*	*>10 ok*

Reinforcing Quantities (no waste included):
SG200 1.17 sy/ft
SG150 7.00 sy/ft

NOTE: THESE CALCULATIONS ARE FOR PRELIMINARY DESIGN ONLY AND SHOULD NOT BE USED FOR CONSTRUCTION WITHOUT REVIEW BY A QUALIFIED ENGINEER

DETAILED CALCULATIONS

Project: *Villas at Winter Park* **Date:** *3/25/2016*
Project No: *SCI14100CSD* **Designer:** *H. McCutcheon*
Case: *Case 2*
Design Method: *Rankine-w/Batter (modified soil interface)*

Soil Parameters:	**ϕ deg**	**c psf**	**γ pcf**
Reinforced Fill	*34*	*0*	*110*
Retained Zone	*27*	*50*	*120*
Foundation Soil	*38*	*50*	*130*

Leveling Pad: ***Crushed Stone***

Modular Concrete Unit: *CompacIII*
Depth: *1.00 ft* **In-Place Wt:** *120 pcf*

Geometry

Internal Stability
(Sloping geometry)
Height: 12.00 ft
BackSlope:
Angle: 26.6 deg
Height: 25.01 ft
Batter: 4.00deg
Surcharge:
Dead Load: 0.00 psf
Live Load: 0 psf
Base width: 10.5 ft

External Stability
(Broken geometry)
Height: 16.92 ft
Angle: 26.6 deg
Height: 20.08 ft
Batter: 4.00deg
Dead Load: 0.00 psf
Live Load:0.00 psf

Earth Pressures:

$$k_a = \frac{\sin^2(\alpha+\phi)}{\sin^2\alpha\,\sin(\alpha-\delta)\left[1+\sqrt{\frac{\sin(\phi+\delta)\sin(\phi-\beta)}{\sin(\alpha-\delta)\sin(\alpha+\beta)}}\right]^2}$$

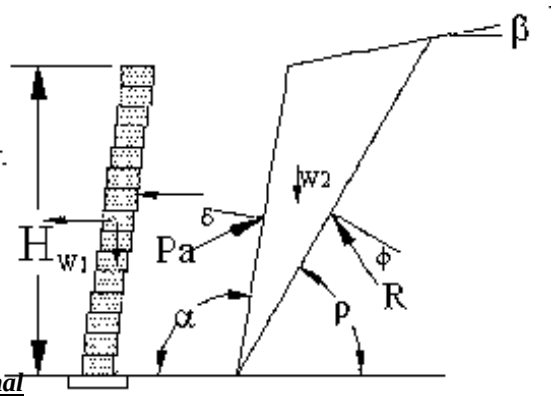

Internal		***External***	
ϕ	= 34 deg	ϕ	= 27 deg
α	= 94.00 deg	α	= 94.00 deg
β	= 26.57 deg	β	= 26.57 deg
δ	= 26.57 deg	δ	= 26.57 deg
H	= 12.00 ft		
ka	= 0.357	ka	= 0.624

Hinge Height: Hinge Ht= Not applicable

Reinforcing Parameters: *Strata-Grid Geogrids*

	Tult	RFcr	RFd	RFid	LTDS	FS	Tal	Ci	Cds
SG200	*3600*	*1.55*	*1.10*	*1.35*	*1564*	*1.50*	*1043*	*0.90*	*0.90*
SG150	*1875*	*1.65*	*1.10*	*1.35*	*765*	*1.50*	*510*	*0.90*	*0.90*

Connection Parameters: Strata-Grid Geogrids

	Frictional 1	Break Pt	Frictional 2
SG200	*Tcl= Ntan(41.00) + 841*	*1050*	*Tcl= Ntan(17.00) +1433*
SG150	*Tcl= Ntan(16.00) + 750*	*1609*	*Tcl= Ntan(0.00) +1211*

Unit Shear Data

Shear = N tan(40.00)
Inter-Unit ShearShear = N tan(34.00) + 900.00

Calculated Reactions

For the "modified" design method, the back of the mass assumed to be vertical for calculation of resisting forces.
effective sliding length = 10.50 ft

$Pa := 0.5H\cdot(\gamma\cdot H\cdot ka - 2c\cdot\sqrt{ka})$ $\quad P_q := q\cdot H\cdot ka$

$Pa_h := Pa\cdot\cos(\delta)$ $\quad Pq_h := P_q\cdot\cos(\delta)$

$Pa_v := Pa\cdot\sin(\delta)$ $\quad Pq_v := P_q\cdot\sin(\delta)$

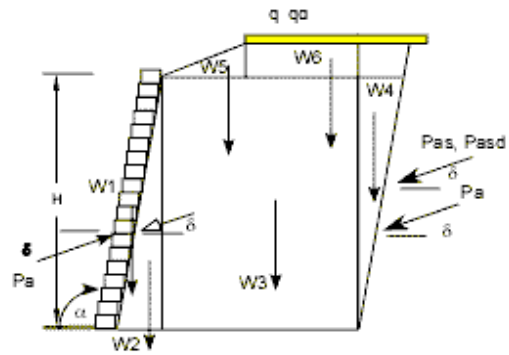

Reactions are:

Area	Force	Arm-x	Arm-y	Moment
W1	*1440.00*	*[0.920]*	*6.000*	*1324.17*
W2	*553.82*	*[1.559]*	*4.000*	*863.64*
W3	*11432.36*	*[6.170]*	*6.000*	*70532.64*
W5	*2250.81*	*[7.613]*	*13.444*	*17135.51*
Pa_h	*8997.10*	*10.500*	*[5.641]*	*-50753.20*
Pa_v	*4798.57*	*[10.500]*	*5.641*	*50384.99*
Sum V =	*20475.56*		*Sum Mr =*	*140240.94*
Sum H =	*8997.10*		*Sum Mo =*	*-50753.20*

Calculate Sliding at Base

For Sliding, Vertical Force = W1+W2+W3+W4+W5+W6+qd	= 20476
The resisting force within the rein. mass , Rf_1	= N tan(34)
	= 13811
The resisting force at the foundation, Rf_2	= N tan(38) + (10.50 x 50.00)
	= 16522
The driving forces, Df, are the sum of the external earth pressures:	
Pa_h + Pql_h + Pqd_h	= 8997
the Factor of Safety for Sliding is Rf_1/Df	= 1.54

Calculate Overturning:

Overturning moment: Mo = Sum Mo	= -50753
Resisting moment: Mr = Sum Mr	= 140241
Factor of Safety of Overturning: Mr/Mo	= 2.76

Calculate eccentricity at base: with Surcharge / without Surcharge
Sum Moments = 89488 / 89488
Sum Vertical = 20476/20476
Base Length = 10.50
e = 0.880 / 0.880

Calculate Ultimate Bearing based on shear:
where:

Nq = 48.93
Nc = 61.35
Ng = 78.02 (ref. Vesic(1973, 1975) eqns)
Qult = 60121 psf

Equivalent footing width, B' = L -2e = 8.74 / 8.74
Bearing pressure = sumV/B' = 2342 psf / 2342 psf [bearing is greatest without liveload]
Factor of Safety for bearing = Qult/bearing= 25.67

Calculate Tensions in Reinforcing:
The tensions in the reinforcing layer, and the assumed load at the connection,
is the vertical area supported by each respective layer, Sv.Column [7] is '2c sqrt(ka)'.

Table of Results ppf

[1] Layer	[2] Depth zi	[3] h1	[4] ka/rho	[5] Pa	[6] (Pas+Pasd)	[7] c	[8] (5+6)cos(d)-7	[9] Ti	[10] Tcl	[11] Tsc
7	1.33	1.17	0.357/48	107	0	0	96	96	531	N/A
6	3.33	3.33	0.357/48	262	0	0	234	234	576	N/A
5	5.33	5.33	0.357/48	419	0	0	374	374	622	N/A
4	7.33	7.17	0.357/48	469	0	0	419	419	668	N/A
3	8.67	8.67	0.357/48	453	0	0	406	406	699	N/A
2	10.00	10.00	0.357/48	523	0	0	468	468	729	N/A
1	11.33	11.33	0.357/48	593	0	0	530	530	1232	N/A

Calculate sliding on the reinforcing:

The shear value is the lessor of base-shear or inter-unit shear.

[1] Layer	[2] Depth zi	[3] N	[4] Li	[5] Cds	[6] τ	[7] RF	[8] ka	[9] Pa	[10] Pas+Pasd	[11] DF	[12] FS
7	*1.33*	*4590*	*9.50*	*0.90*	*1008*	*3794*	*0.723*	*1697*	*0*	*1280*	*2.96*
6	*3.33*	*7135*	*9.50*	*0.90*	*1170*	*5501*	*0.703*	*2875*	*0*	*2262*	*2.43*
5	*5.33*	*9755*	*9.50*	*0.90*	*1332*	*7254*	*0.680*	*4291*	*0*	*3460*	*2.10*
4	*7.33*	*12462*	*9.50*	*0.90*	*1494*	*9059*	*0.662*	*5969*	*0*	*4892*	*1.85*
3	*8.67*	*14306*	*9.50*	*0.90*	*1601*	*10286*	*0.651*	*7215*	*0*	*5962*	*1.73*
2	*10.00*	*16187*	*9.50*	*0.90*	*1709*	*11536*	*0.642*	*8573*	*0*	*7133*	*1.62*
1	*11.33*	*18077*	*9.50*	*0.90*	*1817*	*12791*	*0.630*	*9982*	*0*	*8351*	*1.53*

Calculate pullout of each layer

The FoS (R*/S*) of pullout is calculated as the individual
layer pullout (Rf) divided by the tension (Df) in that layer.
The angle of the failure plane is: 28.00 degrees from vertical.

[1] Layer	[2] Depth zi	[3] Le	[4] SumV	[5] Ci	[6] POi	[7] Ti	[8] FS_PO
7	*1.33*	*4.57*	*2625*	*0.90*	*3187*	*96*	*33.37*
6	*3.33*	*5.50*	*4166*	*0.90*	*5059*	*234*	*21.62*
5	*5.33*	*6.42*	*6047*	*0.90*	*7342*	*374*	*19.61*
4	*7.33*	*7.35*	*8268*	*0.90*	*10038*	*419*	*23.95*
3	*8.67*	*7.96*	*9937*	*0.90*	*12064*	*406*	*29.75*
2	*10.00*	*8.58*	*11757*	*0.90*	*14274*	*468*	*30.51*
1	*11.33*	*9.19*	*13728*	*0.90*	*16667*	*530*	*31.43*

Check Shear & Bending at each layer

Bending on the top layer is the FOS of overturning of the Units
(Most surcharge loads need to be moved back from the face.)

[1] Layer	*[2] Depth zi*	*[3] Si*	*[4] DM*	*[5] Pv*	*[6] RM*	*[7] FS_b*	*[8] DS*	*[9] RS*	*FS_Sh*
7	*1.33*	*1.33*	*14*	*160*	*87*	*6.31*	*31*	*1008*	*32.31*
6	*3.33*	*2.00*	*47*	*280*	*235*	*5.03*	*99*	*1170*	*11.76*
5	*5.33*	*2.00*	*82*	*520*	*379*	*4.62*	*170*	*1332*	*7.85*
4	*7.33*	*2.00*	*117*	*760*	*522*	*4.46*	*240*	*1494*	*6.23*
3	*8.67*	*1.33*	*64*	*960*	*639*	*9.96*	*195*	*1601*	*8.21*
2	*10.00*	*1.33*	*75*	*1120*	*738*	*9.91*	*226*	*1709*	*7.56*
1	*11.33*	*1.33*	*85*	*1280*	*837*	*9.86*	*257*	*1817*	*7.06*

RETAINING WALL DESIGN

KeyWall_2012 Version 3.7.2 Build 16

Project: *Villas at Winter Park*
Project No: *SCI14100CSD*
Case: *Case 3*
Design Method: *Rankine-w/Batter (modified soil interface)*

Date: *3/25/2016*
Designer: *H. McCutcheon*

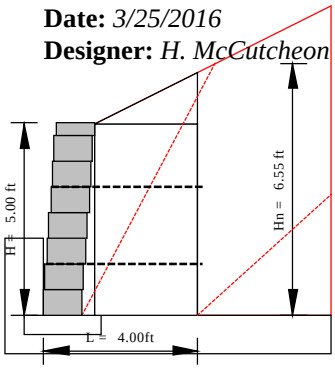

Design Parameters

Soil Parameters:

	ϕ deg	c psf	γ pcf
Reinforced Fill	*34*	*0*	*110*
Retained Zone	*27*	*50*	*120*
Foundation Soil	*38*	*50*	*130*

Reinforced Fill Type: *2.5" minus Crushed Stone or Gravel*
Unit Fill: *Crushed Stone, 1 inch minus*

Minimum Design Factors of Safety

sliding:	1.50	pullout:	1.50	uncertainties:	1.50
overturning:	1.50	shear:	1.50	connection:	1.50
bearing:	1.50	bending:	1.50		

Design Preferences

Reinforcing Parameters: *Strata-Grid Geogrids*

	Tult	RFcr	RFd	RFid	LTDS	FS	Tal	Ci	Cds
SG150	*1875*	*1.65*	*1.10*	*1.35*	*765*	*1.50*	*510*	*0.90*	*0.90*

Analysis: ***Case: Case 3***
3' Embankment Wall at Hackstown Street Extension

Unit Type:	*CompacIII / 120.00 pcf*	*Wall Batter: 4.00 deg (Hinge Ht N/A)*
Leveling Pad:	*Crushed Stone*	
Wall Ht:	*5.00 ft*	*embedment: 2.00 ft*
BackSlope:	*26.57 deg. slope,*	*10.00 ft long*
Surcharge:	*LL: 250 psf uniform surcharge*	*DL: 0 psf uniform surcharge*
	Load Width: 20.00 ft	*Load Width: 0.00 ft*

Results:

	Sliding	Overturning	Bearing	Shear	Bending
Factors of Safety:	*1.70*	*2.73*	*34.37*	*10.77*	*4.12*

Calculated Bearing Pressure: *942 / 942 psf*
Eccentricity at base: 0.37 ft
Reinforcing: (ft & lbs/ft)

Layer	Height	Length	Calc. Tension	Reinf. Type	Allow Ten Tal	Pk Conn Tcl	Pullout FS
2	*3.33*	*4.0*	*125*	*SG150*	*510 ok*	*538 ok*	*4.44 ok*
1	*1.33*	*4.0*	*314*	*SG150*	*510 ok*	*584 ok*	*4.58 ok*

Reinforcing Quantities (no waste included):
SG150 0.89 sy/ft

NOTE: THESE CALCULATIONS ARE FOR PRELIMINARY DESIGN ONLY AND SHOULD NOT BE USED FOR CONSTRUCTION WITHOUT REVIEW BY A QUALIFIED ENGINEER

DETAILED CALCULATIONS

Project: *Villas at Winter Park* **Date:** *3/25/2016*
Project No: *SCI14100CSD* **Designer:** *H. McCutcheon*
Case: *Case 3*
Design Method: *Rankine-w/Batter (modified soil interface)*

Soil Parameters:	**ϕ deg**	**c psf**	**γ pcf**
Reinforced Fill	*34*	*0*	*110*
Retained Zone	*27*	*50*	*120*
Foundation Soil	*38*	*50*	*130*

Leveling Pad: ***Crushed Stone***

Modular Concrete Unit: *CompacIII*
Depth: *1.00 ft* **In-Place Wt:** *120 pcf*

Geometry

Internal Stability
(Sloping geometry)
Height: 5.00 ft
BackSlope:
Angle: 26.6 deg
Height: 5.00 ft
Batter: 4.00deg
Surcharge:
Dead Load: 0.00 psf
Live Load: 0 psf
Base width: 4.0 ft

External Stability
(Broken geometry)
Height: 6.55 ft
Angle: 26.6 deg
Height: 3.45 ft
Batter: 4.00deg
Dead Load: 0.00 psf
Live Load:250.00 psf

Earth Pressures:

$$k_a = \frac{\sin^2(\alpha+\phi)}{\sin^2\alpha\,\sin(\alpha-\delta)\left[1+\sqrt{\frac{\sin(\phi+\delta)\sin(\phi-\beta)}{\sin(\alpha-\delta)\sin(\alpha+\beta)}}\right]^2}$$

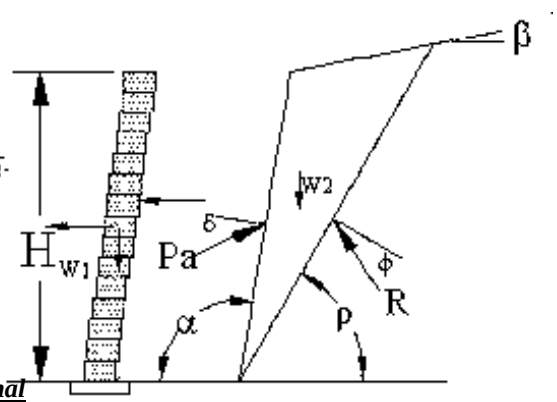

Internal		***External***	
ϕ	= 34 deg	ϕ	= 27 deg
α	= 94.00 deg	α	= 94.00 deg
β	= 26.57 deg	β	= 26.57 deg
δ	= 26.57 deg	δ	= 26.57 deg
H	= 5.00 ft		
ka	= 0.357	ka	= 0.511

Hinge Height: Hinge Ht= Not applicable

Reinforcing Parameters: *Strata-Grid Geogrids*

	Tult	RFcr	RFd	RFid	LTDS	FS	Tal	Ci	Cds
SG150	*1875*	*1.65*	*1.10*	*1.35*	*765*	*1.50*	*510*	*0.90*	*0.90*

Connection Parameters: Strata-Grid Geogrids

	Frictional 1	Break Pt	Frictional 2
SG150	*Tcl= Ntan(16.00) + 750*	*1609*	*Tcl= Ntan(0.00) +1211*

Unit Shear Data

Shear = N tan(40.00)
Inter-Unit ShearShear = N tan(34.00) + 900.00

Calculated Reactions

For the "modified" design method, the back of the mass assumed to be vertical for calculation of resisting forces.
effective sliding length = 4.00 ft

$Pa := 0.5H\cdot(\gamma\cdot H\cdot ka - 2c\cdot\sqrt{ka})$ $\quad P_q := q\cdot H\cdot ka$

$Pa_h := Pa\cdot\cos(\delta)$ $\quad Pq_h := P_q\cdot\cos(\delta)$

$Pa_v := Pa\cdot\sin(\delta)$ $\quad Pq_v := P_q\cdot\sin(\delta)$

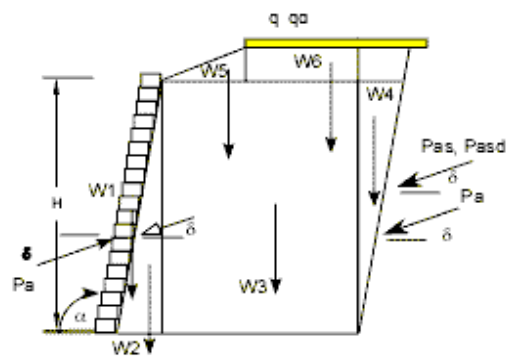

Reactions are:

Area	Force	Arm-x	Arm-y	Moment
W1	*600.00*	*[0.675]*	*2.500*	*404.89*
W2	*96.15*	*[1.233]*	*1.667*	*118.56*
W3	*1457.70*	*[2.675]*	*2.500*	*3899.08*
W5	*210.78*	*[3.117]*	*5.442*	*656.90*
Pa_h	*1004.98*	*4.000*	*[2.185]*	*-2195.77*
Pa_v	*588.77*	*[4.000]*	*2.185*	*2355.07*
Pql_h	*216.69*	*4.000*	*[3.277]*	*-710.18*
Pql_v	*126.95*	*[4.000]*	*3.277*	*507.80*
Sum V =	*3080.35*		*Sum Mr =*	*7942.31*
Sum H =	*1221.67*		*Sum Mo =*	*-2905.95*

Calculate Sliding at Base

For Sliding, Vertical Force = W1+W2+W3+W4+W5+W6+qd	= 3080
The resisting force within the rein. mass , Rf_1	= N tan(34)
	= 2078
The resisting force at the foundation, Rf_2	= N tan(38) + (4.00 x 50.00)
	= 2607
The driving forces, Df, are the sum of the external earth pressures:	
Pa_h + Pql_h + Pqd_h	= 1222
the Factor of Safety for Sliding is Rf_1/Df	= 1.70

Calculate Overturning:

Overturning moment: Mo = Sum Mo	= -2906
Resisting moment: Mr = Sum Mr	= 7942
Factor of Safety of Overturning: Mr/Mo	= 2.73

Calculate eccentricity at base: with Surcharge / without Surcharge
Sum Moments = 5036 / 5036
Sum Vertical = 3080/3080
Base Length = 4.00
e = 0.365 / 0.365

Calculate Ultimate Bearing based on shear:
where:

Nq = 48.93
Nc = 61.35
Ng = 78.02 (ref. Vesic(1973, 1975) eqns)
Qult = 32374 psf

Equivalent footing width, B' = L -2e = 3.27 / 3.27
Bearing pressure = sumV/B' = 942 psf / 942 psf [bearing is greatest without liveload]
Factor of Safety for bearing = Qult/bearing= 34.37

Calculate Tensions in Reinforcing:
The tensions in the reinforcing layer, and the assumed load at the connection,
is the vertical area supported by each respective layer, Sv.Column [7] is '2c sqrt(ka)'.

Table of Results ppf

[1] Layer	[2] Depth zi	[3] h1	[4] ka/rho	[5] Pa	[6] (Pas+Pasd)	[7] c	[8] (5+6)cos(d)-7	[9] Ti	[10] Tcl	[11] Tsc
2	1.67	1.33	0.357/48	140	0	0	125	125	538	N/A
1	3.67	3.83	0.357/48	351	0	0	314	314	584	N/A

Calculate sliding on the reinforcing:

The shear value is the lessor of base-shear or inter-unit shear.

[1] Layer	[2] Depth zi	[3] N	[4] Li	[5] Cds	[6] τ	[7] RF	[8] ka	[9] Pa	[10] Pas+Pasd	[11] DF	[12] FS
2	*1.67*	*980*	*3.00*	*0.90*	*1035*	*1630*	*0.578*	*360*	*112*	*313*	*5.21*
1	*3.67*	*1862*	*3.00*	*0.90*	*1197*	*2327*	*0.534*	*874*	*212*	*801*	*2.91*

Calculate pullout of each layer

The FoS (R*/S*) of pullout is calculated as the individual
layer pullout (Rf) divided by the tension (Df) in that layer.
The angle of the failure plane is: 28.00 degrees from vertical.

[1]	[2]	[3]	[4]	[5]	[6]	[7]	[8]
Layer	Depth zi	Le	SumV	Ci	POi	Ti	FS_PO
2	*1.67*	*1.46*	*457*	*0.90*	*554*	*125*	*4.44*
1	*3.67*	*2.38*	*1184*	*0.90*	*1437*	*314*	*4.58*

Check Shear & Bending at each layer

Bending on the top layer is the FOS of overturning of the Units
(Most surcharge loads need to be moved back from the face.)

[1]	*[2]*	*[3]*	*[4]*	*[5]*	*[6]*	*[7]*	*[8]*	*[9]*	
Layer	*Depth zi*	*Si*	*DM*	*Pv*	*RM*	*FS_b*	*DS*	*RS*	*FS_Sh*
2	*1.67*	*1.67*	*27*	*200*	*112*	*4.12*	*49*	*1035*	*21.23*
1	*3.67*	*2.00*	*53*	*320*	*259*	*4.93*	*111*	*1197*	*10.77*

RETAINING WALL DESIGN

KeyWall_2012 Version 3.7.2 Build 16

Project: *Villas at Winter Park*
Project No: *SCI14100CSD*
Case: *Case 4*
Design Method: *Rankine-w/Batter (modified soil interface)*

Date: *3/25/2016*
Designer: *H. McCutcheon*

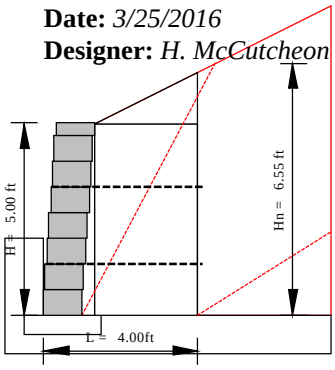

Design Parameters

Soil Parameters:

	ϕ deg	c psf	γ pcf
Reinforced Fill	*34*	*0*	*110*
Retained Zone	*27*	*50*	*120*
Foundation Soil	*38*	*50*	*130*

Reinforced Fill Type: *2.5" minus Crushed Stone or Gravel*
Unit Fill: *Crushed Stone, 1 inch minus*

Minimum Design Factors of Safety

sliding:	1.50	pullout:	1.50	uncertainties:	1.50
overturning:	1.50	shear:	1.50	connection:	1.50
bearing:	1.50	bending:	1.50		

Design Preferences

Reinforcing Parameters: *Strata-Grid Geogrids*

	Tult	RFcr	RFd	RFid	LTDS	FS	Tal	Ci	Cds
SG150	*1875*	*1.65*	*1.10*	*1.35*	*765*	*1.50*	*510*	*0.90*	*0.90*

Analysis: ***Case: Case 4***
5' Wall at Hackstown Street Extension Residence

Unit Type:	*CompacIII / 120.00 pcf*	*Wall Batter: 4.00 deg (Hinge Ht N/A)*
Leveling Pad:	*Crushed Stone*	
Wall Ht:	*5.00 ft*	*embedment: 2.00 ft*
BackSlope:	*26.57 deg. slope,*	*50.00 ft long*
Surcharge:	*LL: 0 psf uniform surcharge*	*DL: 0 psf uniform surcharge*
	Load Width: 0.00 ft	*Load Width: 0.00 ft*

Results:

	Sliding	Overturning	Bearing	Shear	Bending
Factors of Safety:	*1.51*	*2.70*	*33.70*	*10.77*	*4.12*

Calculated Bearing Pressure: *967 / 967 psf*
Eccentricity at base: 0.34 ft
Reinforcing: (ft & lbs/ft)

Layer	Height	Length	Calc. Tension	Reinf. Type	Allow Ten Tal	Pk Conn Tcl	Pullout FS
2	*3.33*	*4.0*	*125*	*SG150*	*510 ok*	*538 ok*	*4.44 ok*
1	*1.33*	*4.0*	*314*	*SG150*	*510 ok*	*584 ok*	*4.58 ok*

Reinforcing Quantities (no waste included):
SG150 0.89 sy/ft

NOTE: THESE CALCULATIONS ARE FOR PRELIMINARY DESIGN ONLY AND SHOULD NOT BE USED FOR CONSTRUCTION WITHOUT REVIEW BY A QUALIFIED ENGINEER

DETAILED CALCULATIONS

Project: *Villas at Winter Park* **Date:** *3/25/2016*
Project No: *SCI14100CSD* **Designer:** *H. McCutcheon*
Case: *Case 4*
Design Method: *Rankine-w/Batter (modified soil interface)*

Soil Parameters:	**ϕ deg**	**c psf**	**γ pcf**
Reinforced Fill	*34*	*0*	*110*
Retained Zone	*27*	*50*	*120*
Foundation Soil	*38*	*50*	*130*

Leveling Pad: ***Crushed Stone***

Modular Concrete Unit: *CompacIII*
Depth: *1.00 ft* **In-Place Wt:** *120 pcf*

Geometry

Internal Stability
(Sloping geometry)
Height: 5.00 ft
BackSlope:
Angle: 26.6 deg
Height: 25.01 ft
Batter: 4.00deg
Surcharge:
Dead Load: 0.00 psf
Live Load: 0 psf
Base width: 4.0 ft

External Stability
(Broken geometry)
Height: 6.55 ft
Angle: 26.6 deg
Height: 23.45 ft
Batter: 4.00deg
Dead Load: 0.00 psf
Live Load:0.00 psf

Earth Pressures:

$$k_a = \frac{\sin^2(\alpha+\phi)}{\sin^2\alpha\,\sin(\alpha-\delta)\left[1+\sqrt{\frac{\sin(\phi+\delta)\sin(\phi-\beta)}{\sin(\alpha-\delta)\sin(\alpha+\beta)}}\right]^2}$$

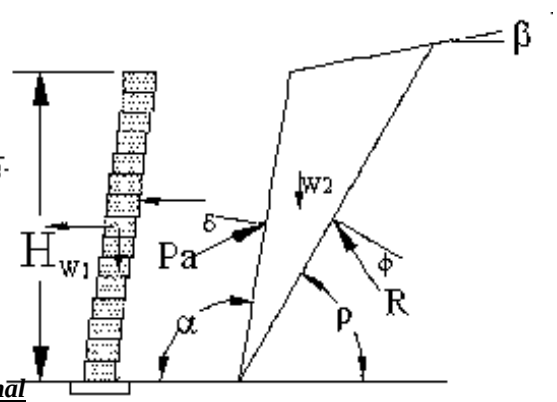

Internal		***External***	
ϕ	= 34 deg	ϕ	= 27 deg
α	= 94.00 deg	α	= 94.00 deg
β	= 26.57 deg	β	= 26.57 deg
δ	= 26.57 deg	δ	= 26.57 deg
H	= 5.00 ft		
ka	= 0.357	ka	= 0.731

Hinge Height: Hinge Ht= Not applicable

Reinforcing Parameters: *Strata-Grid Geogrids*

	Tult	RFcr	RFd	RFid	LTDS	FS	Tal	Ci	Cds
SG150	*1875*	*1.65*	*1.10*	*1.35*	*765*	*1.50*	*510*	*0.90*	*0.90*

Connection Parameters: Strata-Grid Geogrids

	Frictional 1	Break Pt	Frictional 2
SG150	*Tcl= Ntan(16.00) + 750*	*1609*	*Tcl= Ntan(0.00) +1211*

Unit Shear Data

Shear = N tan(40.00)
Inter-Unit ShearShear = N tan(34.00) + 900.00

Calculated Reactions

For the "modified" design method, the back of the mass assumed to be vertical for calculation of resisting forces.
effective sliding length = 4.00 ft

$Pa := 0.5H\cdot(\gamma\cdot H\cdot ka - 2c\cdot\sqrt{ka})$ $\quad P_q := q\cdot H\cdot ka$

$Pa_h := Pa\cdot\cos(\delta)$ $\quad Pq_h := P_q\cdot\cos(\delta)$

$Pa_v := Pa\cdot\sin(\delta)$ $\quad Pq_v := P_q\cdot\sin(\delta)$

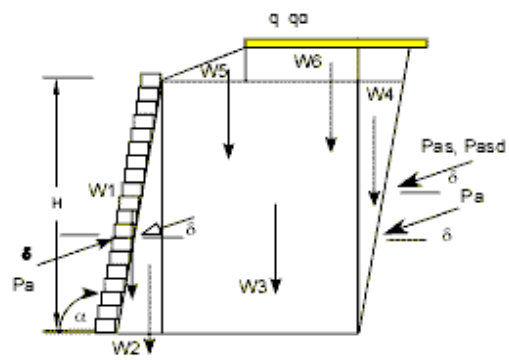

Reactions are:

Area	Force	Arm-x	Arm-y	Moment
W1	*600.00*	*[0.675]*	*2.500*	*404.89*
W2	*96.15*	*[1.233]*	*1.667*	*118.56*
W3	*1457.70*	*[2.675]*	*2.500*	*3899.08*
W5	*210.78*	*[3.117]*	*5.442*	*656.90*
Pa_h	*1434.06*	*4.000*	*[2.185]*	*-3133.27*
Pa_v	*842.49*	*[4.000]*	*2.185*	*3369.96*
Sum V =	*3207.12*		*Sum Mr =*	*8449.39*
Sum H =	*1434.06*		*Sum Mo =*	*-3133.27*

Calculate Sliding at Base

For Sliding, Vertical Force = W1+W2+W3+W4+W5+W6+qd	= 3207
The resisting force within the rein. mass , Rf_1	= N tan(34)
	= 2163
The resisting force at the foundation, Rf_2	= N tan(38) + (4.00 x 50.00)
	= 2706
The driving forces, Df, are the sum of the external earth pressures:	
Pa_h + Pql_h + Pqd_h	= 1434
the Factor of Safety for Sliding is Rf_1/Df	= 1.51

Calculate Overturning:

Overturning moment: Mo = Sum Mo	= -3133
Resisting moment: Mr = Sum Mr	= 8449
Factor of Safety of Overturning: Mr/Mo	= 2.70

Calculate eccentricity at base: with Surcharge / without Surcharge
Sum Moments = 5316 / 5316
Sum Vertical = 3207/3207
Base Length = 4.00
e = 0.342 / 0.342

Calculate Ultimate Bearing based on shear:
where:

Nq = 48.93
Nc = 61.35
Ng = 78.02 (ref. Vesic(1973, 1975) eqns)
Qult = 32604 psf

Equivalent footing width, B' = L -2e = 3.32 / 3.32
Bearing pressure = sumV/B' = 967 psf / 967 psf [bearing is greatest without liveload]
Factor of Safety for bearing = Qult/bearing= 33.70

Calculate Tensions in Reinforcing:
The tensions in the reinforcing layer, and the assumed load at the connection,
is the vertical area supported by each respective layer, Sv.Column [7] is '2c sqrt(ka)'.

Table of Results ppf

[1]	[2]	[3]	[4]	[5]	[6]	[7]	[8]	[9]	[10]	[11]
Layer	Depth zi	h1	ka/rho	Pa	(Pas+Pasd)	c	(5+6)cos(d)-7	Ti	Tcl	Tsc
2	1.67	1.33	0.357/48	140	0	0	125	125	538	N/A
1	3.67	3.83	0.357/48	351	0	0	314	314	584	N/A

Calculate sliding on the reinforcing:

The shear value is the lessor of base-shear or inter-unit shear.

[1]	[2]	[3]	[4]	[5]	[6]	[7]	[8]	[9]	[10]	[11]	[12]
Layer	Depth zi	N	Li	Cds	τ	RF	ka	Pa	Pas+Pasd	DF	FS
2	*1.67*	*973*	*3.00*	*0.90*	*1035*	*1625*	*0.733*	*456*	*0*	*285*	*5.71*
1	*3.67*	*1912*	*3.00*	*0.90*	*1197*	*2358*	*0.733*	*1198*	*0*	*872*	*2.70*

Calculate pullout of each layer

The FoS (R*/S*) of pullout is calculated as the individual
layer pullout (Rf) divided by the tension (Df) in that layer.
The angle of the failure plane is: 28.00 degrees from vertical.

[1]	[2]	[3]	[4]	[5]	[6]	[7]	[8]
Layer	Depth zi	Le	SumV	Ci	POi	Ti	FS_PO
2	*1.67*	*1.46*	*457*	*0.90*	*554*	*125*	*4.44*
1	*3.67*	*2.38*	*1184*	*0.90*	*1437*	*314*	*4.58*

Check Shear & Bending at each layer

Bending on the top layer is the FOS of overturning of the Units
(Most surcharge loads need to be moved back from the face.)

[1]	*[2]*	*[3]*	*[4]*	*[5]*	*[6]*	*[7]*	*[8]*	*[9]*	
Layer	*Depth zi*	*Si*	*DM*	*Pv*	*RM*	*FS_b*	*DS*	*RS*	*FS_Sh*
2	*1.67*	*1.67*	*27*	*200*	*112*	*4.12*	*49*	*1035*	*21.23*
1	*3.67*	*2.00*	*53*	*320*	*259*	*4.93*	*111*	*1197*	*10.77*

RETAINING WALL DESIGN

KeyWall_2012 Version 3.7.2 Build 16

Project: *Villas at Winter Park*
Project No: *SCI14100CSD*
Case: *Case 5*
Design Method: *Rankine-w/Batter (modified soil interface)*

Date: *3/25/2016*
Designer: *H. McCutcheon*

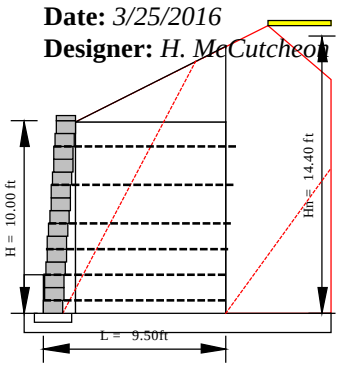

Design Parameters

Soil Parameters:

	ϕ deg	c psf	γ pcf
Reinforced Fill	*34*	*0*	*110*
Retained Zone	*27*	*50*	*120*
Foundation Soil	*38*	*50*	*130*

Reinforced Fill Type: *2.5" minus Crushed Stone or Gravel*
Unit Fill: *Crushed Stone, 1 inch minus*

Minimum Design Factors of Safety

sliding:	1.50	pullout:	1.50	uncertainties:	1.50
overturning:	1.50	shear:	1.50	connection:	1.50
bearing:	1.50	bending:	1.50		

Design Preferences

Reinforcing Parameters: *Strata-Grid Geogrids*

	Tult	RFcr	RFd	RFid	LTDS	FS	Tal	Ci	Cds
SG150	*1875*	*1.65*	*1.10*	*1.35*	*765*	*1.50*	*510*	*0.90*	*0.90*

Analysis: ***Case: Case 5***
8' Embankment Wall at Hackstown Street Extension

Unit Type:	*CompacIII / 120.00 pcf*	*Wall Batter: 4.00 deg (Hinge Ht N/A)*
Leveling Pad:	*Crushed Stone*	
Wall Ht:	*10.00 ft*	*embedment: 2.00 ft*
BackSlope:	*26.57 deg. slope,*	*10.00 ft long*
Surcharge:	*LL: 250 psf uniform surcharge*	*DL: 0 psf uniform surcharge*
	Load Width: 20.00 ft	*Load Width: 0.00 ft*

Results:

	Sliding	Overturning	Bearing	Shear	Bending
Factors of Safety:	*1.52*	*2.26*	*21.96*	*7.32*	*4.31*

Calculated Bearing Pressure: *2079 / 2079 psf*
Eccentricity at base: 1.81 ft
Reinforcing: (ft & lbs/ft)

Layer	Height	Length	Calc. Tension	Reinf. Type	Allow Ten Tal	Pk Conn Tcl	Pullout FS
6	*8.67*	*9.5*	*103*	*SG150*	*510 ok*	*531 ok*	*>10 ok*
5	*6.67*	*9.5*	*252*	*SG150*	*510 ok*	*576 ok*	*>10 ok*
4	*4.67*	*9.5*	*326*	*SG150*	*510 ok*	*622 ok*	*>10 ok*
3	*3.33*	*9.5*	*328*	*SG150*	*510 ok*	*653 ok*	*>10 ok*
2	*2.00*	*9.5*	*399*	*SG150*	*510 ok*	*684 ok*	*>10 ok*
1	*0.67*	*9.5*	*466*	*SG150*	*510 ok*	*714 ok*	*>10 ok*

Reinforcing Quantities (no waste included):
SG150 6.33 sy/ft

NOTE: THESE CALCULATIONS ARE FOR PRELIMINARY DESIGN ONLY AND SHOULD NOT BE USED FOR CONSTRUCTION WITHOUT REVIEW BY A QUALIFIED ENGINEER

DETAILED CALCULATIONS

Project: *Villas at Winter Park* **Date:** *3/25/2016*
Project No: *SCI14100CSD* **Designer:** *H. McCutcheon*
Case: *Case 5*
Design Method: *Rankine-w/Batter (modified soil interface)*

Soil Parameters:	**ϕ deg**	**c psf**	**γ pcf**
Reinforced Fill	*34*	*0*	*110*
Retained Zone	*27*	*50*	*120*
Foundation Soil	*38*	*50*	*130*

Leveling Pad: ***Crushed Stone***

Modular Concrete Unit: *CompacIII*
Depth: *1.00 ft* **In-Place Wt:** *120 pcf*

Geometry

Internal Stability
(Broken geometry)
Height: 10.00 ft
BackSlope:
Angle: 26.6 deg
Height: 5.00 ft
Batter: 4.00deg
Surcharge:
Dead Load: 0.00 psf
Live Load: 250.00 psf
Base width: 9.5 ft

External Stability
(Broken geometry)
Height: 14.40 ft
Angle: 26.6 deg
Height: 0.60 ft
Batter: 4.00deg
Dead Load: 0.00 psf
Live Load:250.00 psf

Earth Pressures:

$$k_a = \frac{\sin^2(\alpha+\phi)}{\sin^2\alpha\,\sin(\alpha-\delta)\left[1+\sqrt{\frac{\sin(\phi+\delta)\sin(\phi-\beta)}{\sin(\alpha-\delta)\sin(\alpha+\beta)}}\right]^2}$$

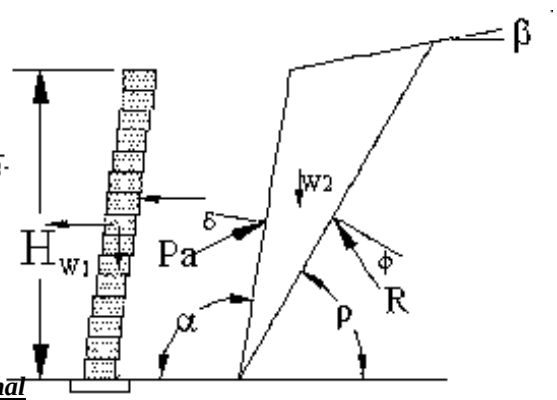

Internal		***External***	
ϕ	= 34 deg	ϕ	= 27 deg
α	= 94.00 deg	α	= 94.00 deg
β	= 26.57 deg	β	= 26.57 deg
δ	= 14.04 deg	δ	= 2.37 deg
H	= 10.00 ft		
ka	= 0.336	ka	= 0.381

Hinge Height: Hinge Ht= Not applicable

Reinforcing Parameters: *Strata-Grid Geogrids*

	Tult	RFcr	RFd	RFid	LTDS	FS	Tal	Ci	Cds
SG150	*1875*	*1.65*	*1.10*	*1.35*	*765*	*1.50*	*510*	*0.90*	*0.90*

Connection Parameters: Strata-Grid Geogrids

	Frictional 1	Break Pt	Frictional 2
SG150	*Tcl= Ntan(16.00) + 750*	*1609*	*Tcl= Ntan(0.00) +1211*

Unit Shear Data

Shear = N tan(40.00)
Inter-Unit ShearShear = N tan(34.00) + 900.00

Calculated Reactions

For the "modified" design method, the back of the mass assumed to be vertical for calculation of resisting forces.
effective sliding length = 9.50 ft

$$Pa := 0.5H\cdot\left(\gamma\cdot H\cdot ka - 2c\cdot\sqrt{ka}\right) \qquad P_q := q\cdot H\cdot ka$$

$$Pa_h := Pa\cdot\cos(\delta) \qquad Pq_h := P_q\cdot\cos(\delta)$$

$$Pa_v := Pa\cdot\sin(\delta) \qquad Pq_v := P_q\cdot\sin(\delta)$$

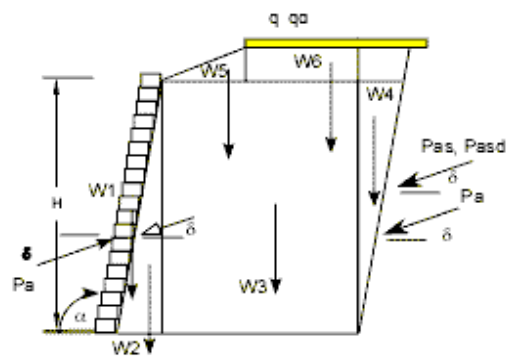

Reactions are:

Area	Force	Arm-x	Arm-y	Moment
W1	*1200.00*	*[0.850]*	*5.000*	*1019.56*
W2	*384.60*	*[1.466]*	*3.333*	*563.89*
W3	*8580.80*	*[5.600]*	*5.000*	*48049.37*
W5	*1825.94*	*[6.900]*	*11.300*	*12598.52*
Pa_h	*4379.12*	*9.500*	*[4.802]*	*-21027.02*
Pa_v	*196.07*	*[9.500]*	*4.802*	*1862.62*
Pql_h	*1042.14*	*9.500*	*[7.202]*	*-7505.96*
Pql_v	*46.66*	*[9.500]*	*7.202*	*443.26*
Sum V =	*12234.06*		*Sum Mr =*	*64537.22*
Sum H =	*5421.26*		*Sum Mo =*	*-28532.98*

Calculate Sliding at Base

For Sliding, Vertical Force = W1+W2+W3+W4+W5+W6+qd	= 12234
The resisting force within the rein. mass , Rf_1	= N tan(34)
	= 8252
The resisting force at the foundation, Rf_2	= N tan(38) + (9.50 x 50.00)
	= 10033
The driving forces, Df, are the sum of the external earth pressures:	
Pa_h + Pql_h + Pqd_h	= 5421
the Factor of Safety for Sliding is Rf_1/Df	= 1.52

Calculate Overturning:

Overturning moment: Mo = Sum Mo	= -28533
Resisting moment: Mr = Sum Mr	= 64537
Factor of Safety of Overturning: Mr/Mo	= 2.26

Calculate eccentricity at base: with Surcharge / without Surcharge
Sum Moments = 36004 / 36004
Sum Vertical = 12234/12234
Base Length = 9.50
e = 1.807 / 1.807

Calculate Ultimate Bearing based on shear:
where:

Nq = 48.93
Nc = 61.35
Ng = 78.02 (ref. Vesic(1973, 1975) eqns)
Qult = 45641 psf

Equivalent footing width, B' = L -2e = 5.89 / 5.89
Bearing pressure = sumV/B' = 2079 psf / 2079 psf [bearing is greatest without liveload]
Factor of Safety for bearing = Qult/bearing= 21.96

Calculate Tensions in Reinforcing:
The tensions in the reinforcing layer, and the assumed load at the connection,
is the vertical area supported by each respective layer, Sv.Column [7] is '2c sqrt(ka)'.

Table of Results ppf

[1] Layer	[2] Depth zi	[3] h1	[4] ka/rho	[5] Pa	[6] (Pas+Pasd)	[7] c	[8] (5+6)cos(d)-7	[9] Ti	[10] Tcl	[11] Tsc
6	1.33	1.17	0.355/49	106	0	0	103	103	531	N/A
5	3.33	3.33	0.355/49	260	0	0	252	252	576	N/A
4	5.33	5.17	0.354/50	336	0	0	326	326	622	N/A
3	6.67	6.67	0.335/46	328	11	0	328	328	653	N/A
2	8.00	8.00	0.340/48	398	13	0	399	399	684	N/A
1	9.33	9.33	0.341/50	466	14	0	466	466	714	N/A

Calculate sliding on the reinforcing:

The shear value is the lessor of base-shear or inter-unit shear.

[1] Layer	[2] Depth zi	[3] N	[4] Li	[5] Cds	[6] τ	[7] RF	[8] ka	[9] Pa	[10] Pas+Pasd	[11] DF	[12] FS
6	*1.33*	*3208*	*8.50*	*0.90*	*1008*	*2955*	*0.435*	*859*	*469*	*1139*	*2.59*
5	*3.33*	*5095*	*8.50*	*0.90*	*1170*	*4263*	*0.408*	*1467*	*608*	*1826*	*2.33*
4	*5.33*	*6904*	*8.50*	*0.90*	*1332*	*5523*	*0.396*	*2256*	*765*	*2712*	*2.04*
3	*6.67*	*8098*	*8.50*	*0.90*	*1440*	*6355*	*0.391*	*2874*	*869*	*3394*	*1.87*
2	*8.00*	*9280*	*8.50*	*0.90*	*1548*	*7181*	*0.386*	*3566*	*973*	*4150*	*1.73*
1	*9.33*	*10452*	*8.50*	*0.90*	*1655*	*8000*	*0.382*	*4331*	*1077*	*4979*	*1.61*

Calculate pullout of each layer

The FoS (R*/S*) of pullout is calculated as the individual
layer pullout (Rf) divided by the tension (Df) in that layer.
The angle of the failure plane is: 28.00 degrees from vertical.

[1] Layer	[2] Depth zi	[3] Le	[4] SumV	[5] Ci	[6] POi	[7] Ti	[8] FS_PO
6	*1.33*	*4.50*	*2322*	*0.90*	*2819*	*103*	*27.36*
5	*3.33*	*5.42*	*3796*	*0.90*	*4608*	*252*	*18.27*
4	*5.33*	*6.35*	*5609*	*0.90*	*6810*	*326*	*20.91*
3	*6.67*	*6.96*	*7007*	*0.90*	*8507*	*328*	*25.91*
2	*8.00*	*7.58*	*8555*	*0.90*	*10387*	*399*	*26.02*
1	*9.33*	*8.19*	*10255*	*0.90*	*12451*	*466*	*26.72*

Check Shear & Bending at each layer

Bending on the top layer is the FOS of overturning of the Units
(Most surcharge loads need to be moved back from the face.)

[1] Layer	*[2] Depth zi*	*[3] Si*	*[4] DM*	*[5] Pv*	*[6] RM*	*[7] FS_b*	*[8] DS*	*[9] RS*	*FS_Sh*
6	*1.33*	*1.33*	*15*	*160*	*87*	*5.85*	*34*	*1008*	*29.96*
5	*3.33*	*2.00*	*50*	*280*	*235*	*4.67*	*107*	*1170*	*10.91*
4	*5.33*	*2.00*	*88*	*520*	*379*	*4.31*	*182*	*1332*	*7.32*
3	*6.67*	*1.33*	*51*	*720*	*490*	*9.54*	*157*	*1440*	*9.19*
2	*8.00*	*1.33*	*63*	*880*	*589*	*9.42*	*190*	*1548*	*8.12*
1	*9.33*	*1.33*	*74*	*1040*	*689*	*9.31*	*225*	*1655*	*7.37*

RETAINING WALL DESIGN

KeyWall_2012 Version 3.7.2 Build 16

Project: *Villas at Winter Park*
Project No: *SCI14100CSD*
Case: *Case 6*
Design Method: *Rankine-w/Batter (modified soil interface)*

Date: *3/25/2016*
Designer: *H. McCutcheon*

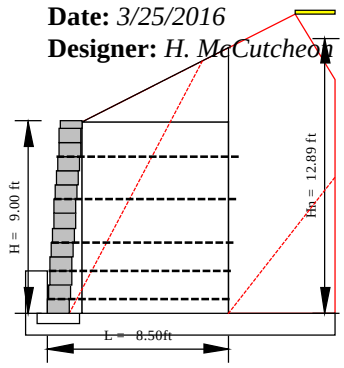

Design Parameters

Soil Parameters:	**ϕ deg**	**c psf**	**γ pcf**
Reinforced Fill	*34*	*0*	*110*
Retained Zone	*27*	*50*	*120*
Foundation Soil	*38*	*50*	*130*

Reinforced Fill Type: *2.5" minus Crushed Stone or Gravel*
Unit Fill: *Crushed Stone, 1 inch minus*

Minimum Design Factors of Safety

sliding:	1.50	pullout:	1.50	uncertainties:	1.50
overturning:	1.50	shear:	1.50	connection:	1.50
bearing:	1.50	bending:	1.50		

Design Preferences

Reinforcing Parameters: *Strata-Grid Geogrids*

	Tult	*RFcr*	*RFd*	*RFid*	*LTDS*	*FS*	*Tal*	*Ci*	*Cds*
SG150	*1875*	*1.65*	*1.10*	*1.35*	*765*	*1.50*	*510*	*0.90*	*0.90*

Analysis: ***Case: Case 6***
7' Embankment Wall at Hackstown Street Extension

Unit Type:	*CompacIII / 120.00 pcf*	*Wall Batter: 4.00 deg (Hinge Ht N/A)*
Leveling Pad:	*Crushed Stone*	
Wall Ht:	*9.00 ft*	*embedment: 2.00 ft*
BackSlope:	*26.57 deg. slope,*	*10.00 ft long*
Surcharge:	*LL: 250 psf uniform surcharge*	*DL: 0 psf uniform surcharge*
	Load Width: 20.00 ft	*Load Width: 0.00 ft*

Results:	***Sliding***	***Overturning***	***Bearing***	***Shear***	***Bending***
Factors of Safety:	*1.52*	*2.29*	*23.35*	*7.03*	*3.86*

Calculated Bearing Pressure: *1852 / 1852 psf*
Eccentricity at base: 1.54 ft
Reinforcing: (ft & lbs/ft)

Layer	**Height**	**Length**	**Calc. Tension**	**Reinf. Type**	**Allow Ten Tal**	**Pk Conn Tcl**	**Pullout FS**
5	*7.33*	*8.5*	*133*	*SG150*	*510 ok*	*538 ok*	*>10 ok*
4	*5.33*	*8.5*	*275*	*SG150*	*510 ok*	*584 ok*	*>10 ok*
3	*3.33*	*8.5*	*344*	*SG150*	*510 ok*	*630 ok*	*>10 ok*
2	*2.00*	*8.5*	*347*	*SG150*	*510 ok*	*661 ok*	*>10 ok*
1	*0.67*	*8.5*	*410*	*SG150*	*510 ok*	*691 ok*	*>10 ok*

Reinforcing Quantities (no waste included):
SG150 4.72 sy/ft

NOTE: THESE CALCULATIONS ARE FOR PRELIMINARY DESIGN ONLY AND SHOULD NOT BE USED FOR CONSTRUCTION WITHOUT REVIEW BY A QUALIFIED ENGINEER

DETAILED CALCULATIONS

Project: *Villas at Winter Park* **Date:** *3/25/2016*
Project No: *SCI14100CSD* **Designer:** *H. McCutcheon*
Case: *Case 6*
Design Method: *Rankine-w/Batter (modified soil interface)*

Soil Parameters:	**ϕ deg**	**c psf**	**γ pcf**
Reinforced Fill	*34*	*0*	*110*
Retained Zone	*27*	*50*	*120*
Foundation Soil	*38*	*50*	*130*

Leveling Pad: ***Crushed Stone***

Modular Concrete Unit: *CompacIII*
Depth: *1.00 ft* **In-Place Wt:** *120 pcf*

Geometry

Internal Stability
(Broken geometry)
Height: 9.00 ft
BackSlope:
Angle: 26.6 deg
Height: 5.00 ft
Batter: 4.00deg
Surcharge:
Dead Load: 0.00 psf
Live Load: 250.00 psf
Base width: 8.5 ft

External Stability
(Broken geometry)
Height: 12.89 ft
Angle: 26.6 deg
Height: 1.11 ft
Batter: 4.00deg
Dead Load: 0.00 psf
Live Load:250.00 psf

Earth Pressures:

$$k_a = \frac{\sin^2(\alpha+\phi)}{\sin^2\alpha\,\sin(\alpha-\delta)\left[1+\sqrt{\frac{\sin(\phi+\delta)\sin(\phi-\beta)}{\sin(\alpha-\delta)\sin(\alpha+\beta)}}\right]^2}$$

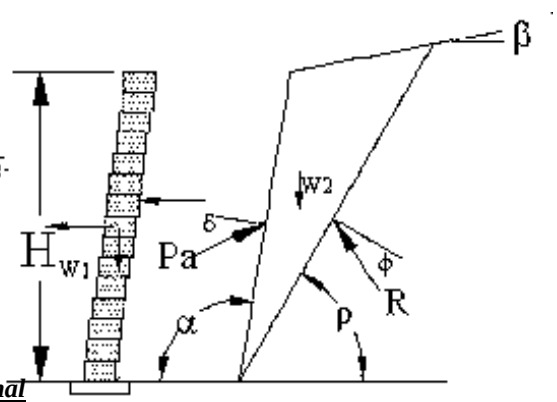

Internal		***External***	
ϕ	= 34 deg	ϕ	= 27 deg
α	= 94.00 deg	α	= 94.00 deg
β	= 26.57 deg	β	= 26.57 deg
δ	= 15.53 deg	δ	= 4.94 deg
H	= 9.00 ft		
ka	= 0.342	ka	= 0.396

Hinge Height: Hinge Ht= Not applicable

Reinforcing Parameters: *Strata-Grid Geogrids*

	Tult	RFcr	RFd	RFid	LTDS	FS	Tal	Ci	Cds
SG150	*1875*	*1.65*	*1.10*	*1.35*	*765*	*1.50*	*510*	*0.90*	*0.90*

Connection Parameters: Strata-Grid Geogrids

	Frictional 1	Break Pt	Frictional 2
SG150	*Tcl= Ntan(16.00) + 750*	*1609*	*Tcl= Ntan(0.00) +1211*

Unit Shear Data

Shear = N tan(40.00)
Inter-Unit ShearShear = N tan(34.00) + 900.00

Calculated Reactions

For the "modified" design method, the back of the mass assumed to be vertical for calculation of resisting forces.
effective sliding length = 8.50 ft

$Pa := 0.5H\cdot(\gamma\cdot H\cdot ka - 2c\cdot\sqrt{ka})$ $\quad P_q := q\cdot H\cdot ka$

$Pa_h := Pa\cdot\cos(\delta)$ $\quad Pq_h := P_q\cdot\cos(\delta)$

$Pa_v := Pa\cdot\sin(\delta)$ $\quad Pq_v := P_q\cdot\sin(\delta)$

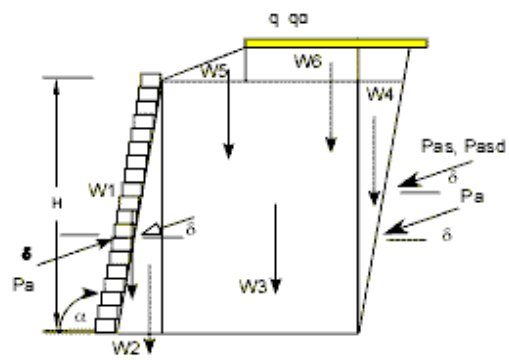

Reactions are:

Area	Force	Arm-x	Arm-y	Moment
W1	*1080.00*	*[0.815]*	*4.500*	*879.84*
W2	*311.52*	*[1.420]*	*3.000*	*442.23*
W3	*6801.95*	*[5.065]*	*4.500*	*34449.65*
W5	*1416.48*	*[6.210]*	*10.145*	*8796.06*
Pa_h	*3606.19*	*8.500*	*[4.296]*	*-15490.66*
Pa_v	*340.10*	*[8.500]*	*4.296*	*2890.81*
Pql_h	*852.50*	*8.500*	*[6.443]*	*-5492.99*
Pql_v	*80.40*	*[8.500]*	*6.443*	*683.39*
Sum V =	*10030.45*		*Sum Mr =*	*48141.98*
Sum H =	*4458.69*		*Sum Mo =*	*-20983.65*

Calculate Sliding at Base

For Sliding, Vertical Force = W1+W2+W3+W4+W5+W6+qd	= 10030
The resisting force within the rein. mass , Rf_1	= N tan(34)
	= 6766
The resisting force at the foundation, Rf_2	= N tan(38) + (8.50 x 50.00)
	= 8262
The driving forces, Df, are the sum of the external earth pressures:	
Pa_h + Pql_h + Pqd_h	= 4459
the Factor of Safety for Sliding is Rf_1/Df	= 1.52

Calculate Overturning:

Overturning moment: Mo = Sum Mo	= -20984
Resisting moment: Mr = Sum Mr	= 48142
Factor of Safety of Overturning: Mr/Mo	= 2.29

Calculate eccentricity at base: with Surcharge / without Surcharge
Sum Moments = 27158 / 27158
Sum Vertical = 10030/10030
Base Length = 8.50
e = 1.542 / 1.542

Calculate Ultimate Bearing based on shear:
where:

Nq = 48.93
Nc = 61.35
Ng = 78.02 (ref. Vesic(1973, 1975) eqns)
Qult = 43254 psf

Equivalent footing width, B' = L -2e = 5.42 / 5.42
Bearing pressure = sumV/B' = 1852 psf / 1852 psf [bearing is greatest without liveload]
Factor of Safety for bearing = Qult/bearing= 23.35

Calculate Tensions in Reinforcing:
The tensions in the reinforcing layer, and the assumed load at the connection,
is the vertical area supported by each respective layer, Sv.Column [7] is '2c sqrt(ka)'.

Table of Results ppf

[1] Layer	[2] Depth zi	[3] h1	[4] ka/rho	[5] Pa	[6] (Pas+Pasd)	[7] c	[8] (5+6)cos(d)-7	[9] Ti	[10] Tcl	[11] Tsc
5	1.67	1.33	0.354/49	138	0	0	133	133	538	N/A
4	3.67	3.67	0.354/50	285	0	0	275	275	584	N/A
3	5.67	5.50	0.354/50	357	0	0	344	344	630	N/A
2	7.00	7.00	0.346/48	356	5	0	347	347	661	N/A
1	8.33	8.33	0.337/48	411	14	0	410	410	691	N/A

Calculate sliding on the reinforcing:

The shear value is the lessor of base-shear or inter-unit shear.

[1] Layer	[2] Depth zi	[3] N	[4] Li	[5] Cds	[6] τ	[7] RF	[8] ka	[9] Pa	[10] Pas+Pasd	[11] DF	[12] FS
5	*1.67*	*2992*	*7.50*	*0.90*	*1035*	*2851*	*0.451*	*835*	*386*	*1030*	*2.77*
4	*3.67*	*4639*	*7.50*	*0.90*	*1197*	*4013*	*0.429*	*1468*	*533*	*1747*	*2.30*
3	*5.67*	*6270*	*7.50*	*0.90*	*1359*	*5165*	*0.415*	*2272*	*674*	*2629*	*1.96*
2	*7.00*	*7348*	*7.50*	*0.90*	*1467*	*5927*	*0.406*	*2889*	*778*	*3308*	*1.79*
1	*8.33*	*8418*	*7.50*	*0.90*	*1575*	*6685*	*0.399*	*3577*	*882*	*4057*	*1.65*

Calculate pullout of each layer

The FoS (R*/S*) of pullout is calculated as the individual
layer pullout (Rf) divided by the tension (Df) in that layer.
The angle of the failure plane is: 28.00 degrees from vertical.

[1] Layer	[2] Depth zi	[3] Le	[4] SumV	[5] Ci	[6] POi	[7] Ti	[8] FS_PO
5	*1.67*	*4.11*	*2069*	*0.90*	*2512*	*133*	*18.84*
4	*3.67*	*5.04*	*3460*	*0.90*	*4201*	*275*	*15.28*
3	*5.67*	*5.96*	*5191*	*0.90*	*6302*	*344*	*18.34*
2	*7.00*	*6.58*	*6533*	*0.90*	*7932*	*347*	*22.83*
1	*8.33*	*7.19*	*8026*	*0.90*	*9745*	*410*	*23.76*

Check Shear & Bending at each layer

Bending on the top layer is the FOS of overturning of the Units
(Most surcharge loads need to be moved back from the face.)

[1] Layer	*[2] Depth zi*	*[3] Si*	*[4] DM*	*[5] Pv*	*[6] RM*	*[7] FS_b*	*[8] DS*	*[9] RS*	*FS_Sh*
5	*1.67*	*1.67*	*29*	*200*	*112*	*3.86*	*52*	*1035*	*19.87*
4	*3.67*	*2.00*	*56*	*320*	*259*	*4.61*	*119*	*1197*	*10.08*
3	*5.67*	*2.00*	*94*	*560*	*403*	*4.30*	*193*	*1359*	*7.03*
2	*7.00*	*1.33*	*54*	*760*	*515*	*9.48*	*166*	*1467*	*8.86*
1	*8.33*	*1.33*	*65*	*920*	*614*	*9.47*	*197*	*1575*	*7.98*

RETAINING WALL DESIGN

KeyWall_2012 Version 3.7.2 Build 16

Project: *Villas at Winter Park*
Project No: *SCI14100CSD*
Case: *Case 7*
Design Method: *Rankine-w/Batter (modified soil interface)*

Date: *3/25/2016*
Designer: *H. McCutcheon*

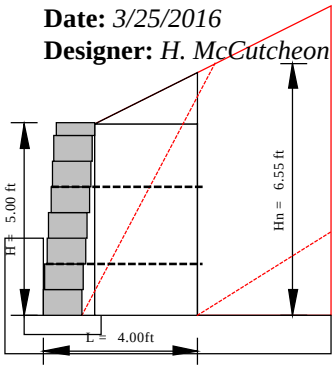

Design Parameters

Soil Parameters:

	ϕ deg	c psf	γ pcf
Reinforced Fill	*34*	*0*	*110*
Retained Zone	*27*	*50*	*120*
Foundation Soil	*38*	*50*	*130*

Reinforced Fill Type: *2.5" minus Crushed Stone or Gravel*
Unit Fill: *Crushed Stone, 1 inch minus*

Minimum Design Factors of Safety

sliding:	1.50	pullout:	1.50	uncertainties:	1.50
overturning:	1.50	shear:	1.50	connection:	1.50
bearing:	1.50	bending:	1.50		

Design Preferences

Reinforcing Parameters: *Strata-Grid Geogrids*

	Tult	RFcr	RFd	RFid	LTDS	FS	Tal	Ci	Cds
SG150	*1875*	*1.65*	*1.10*	*1.35*	*765*	*1.50*	*510*	*0.90*	*0.90*

Analysis: ***Case: Case 7***
3' Wall at Hackstown Street Extension Residence

Unit Type:	*CompacIII / 120.00 pcf*	*Wall Batter: 4.00 deg (Hinge Ht N/A)*
Leveling Pad:	*Crushed Stone*	
Wall Ht:	*5.00 ft*	*embedment: 2.00 ft*
BackSlope:	*26.57 deg. slope,*	*50.00 ft long*
Surcharge:	*LL: 0 psf uniform surcharge*	*DL: 0 psf uniform surcharge*
	Load Width: 0.00 ft	*Load Width: 0.00 ft*

Results:

	Sliding	Overturning	Bearing	Shear	Bending
Factors of Safety:	*1.51*	*2.70*	*33.70*	*10.77*	*4.12*

Calculated Bearing Pressure: *967 / 967 psf*
Eccentricity at base: 0.34 ft
Reinforcing: (ft & lbs/ft)

Layer	Height	Length	Calc. Tension	Reinf. Type	Allow Ten Tal	Pk Conn Tcl	Pullout FS
2	*3.33*	*4.0*	*125*	*SG150*	*510 ok*	*538 ok*	*4.44 ok*
1	*1.33*	*4.0*	*314*	*SG150*	*510 ok*	*584 ok*	*4.58 ok*

Reinforcing Quantities (no waste included):
SG150 0.89 sy/ft

NOTE: THESE CALCULATIONS ARE FOR PRELIMINARY DESIGN ONLY AND SHOULD NOT BE USED FOR CONSTRUCTION WITHOUT REVIEW BY A QUALIFIED ENGINEER

DETAILED CALCULATIONS

Project: *Villas at Winter Park* **Date:** *3/25/2016*
Project No: *SCI14100CSD* **Designer:** *H. McCutcheon*
Case: *Case 7*
Design Method: *Rankine-w/Batter (modified soil interface)*

Soil Parameters:	**ϕ deg**	**c psf**	**γ pcf**
Reinforced Fill	*34*	*0*	*110*
Retained Zone	*27*	*50*	*120*
Foundation Soil	*38*	*50*	*130*

Leveling Pad: ***Crushed Stone***

Modular Concrete Unit: *CompacIII*
Depth: *1.00 ft* **In-Place Wt:** *120 pcf*

Geometry

Internal Stability
(Sloping geometry)
Height: 5.00 ft
BackSlope:
Angle: 26.6 deg
Height: 25.01 ft
Batter: 4.00deg
Surcharge:
Dead Load: 0.00 psf
Live Load: 0 psf
Base width: 4.0 ft

External Stability
(Broken geometry)
Height: 6.55 ft
Angle: 26.6 deg
Height: 23.45 ft
Batter: 4.00deg
Dead Load: 0.00 psf
Live Load:0.00 psf

Earth Pressures:

$$k_a = \frac{\sin^2(\alpha+\phi)}{\sin^2\alpha\,\sin(\alpha-\delta)\left[1+\sqrt{\frac{\sin(\phi+\delta)\sin(\phi-\beta)}{\sin(\alpha-\delta)\sin(\alpha+\beta)}}\right]^2}$$

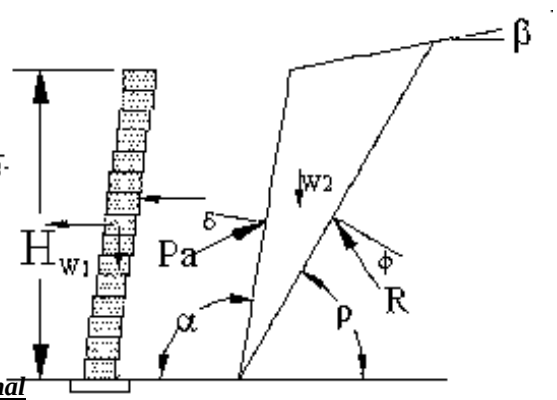

Internal		***External***	
ϕ	= 34 deg	ϕ	= 27 deg
α	= 94.00 deg	α	= 94.00 deg
β	= 26.57 deg	β	= 26.57 deg
δ	= 26.57 deg	δ	= 26.57 deg
H	= 5.00 ft		
ka	= 0.357	ka	= 0.731

Hinge Height: Hinge Ht= Not applicable

Reinforcing Parameters: *Strata-Grid Geogrids*

	Tult	RFcr	RFd	RFid	LTDS	FS	Tal	Ci	Cds
SG150	*1875*	*1.65*	*1.10*	*1.35*	*765*	*1.50*	*510*	*0.90*	*0.90*

Connection Parameters: Strata-Grid Geogrids

	Frictional 1	Break Pt	Frictional 2
SG150	*Tcl= Ntan(16.00) + 750*	*1609*	*Tcl= Ntan(0.00) +1211*

Unit Shear Data

Shear = N tan(40.00)
Inter-Unit ShearShear = N tan(34.00) + 900.00

Calculated Reactions

For the "modified" design method, the back of the mass assumed to be vertical for calculation of resisting forces.
effective sliding length = 4.00 ft

$Pa := 0.5H\cdot(\gamma\cdot H\cdot ka - 2c\cdot\sqrt{ka})$ $\quad P_q := q\cdot H\cdot ka$

$Pa_h := Pa\cdot\cos(\delta)$ $\quad Pq_h := P_q\cdot\cos(\delta)$

$Pa_v := Pa\cdot\sin(\delta)$ $\quad Pq_v := P_q\cdot\sin(\delta)$

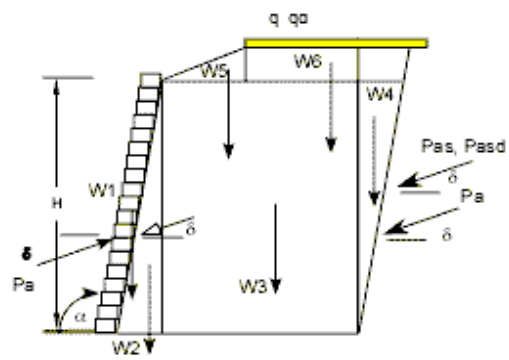

Reactions are:

Area	Force	Arm-x	Arm-y	Moment
W1	*600.00*	*[0.675]*	*2.500*	*404.89*
W2	*96.15*	*[1.233]*	*1.667*	*118.56*
W3	*1457.70*	*[2.675]*	*2.500*	*3899.08*
W5	*210.78*	*[3.117]*	*5.442*	*656.90*
Pa_h	*1434.06*	*4.000*	*[2.185]*	*-3133.27*
Pa_v	*842.49*	*[4.000]*	*2.185*	*3369.96*
Sum V =	*3207.12*		*Sum Mr =*	*8449.39*
Sum H =	*1434.06*		*Sum Mo =*	*-3133.27*

Calculate Sliding at Base

For Sliding, Vertical Force = W1+W2+W3+W4+W5+W6+qd	= 3207
The resisting force within the rein. mass , Rf_1	= N tan(34)
	= 2163
The resisting force at the foundation, Rf_2	= N tan(38) + (4.00 x 50.00)
	= 2706
The driving forces, Df, are the sum of the external earth pressures:	
Pa_h + Pql_h + Pqd_h	= 1434
the Factor of Safety for Sliding is Rf_1/Df	= 1.51

Calculate Overturning:

Overturning moment: Mo = Sum Mo	= -3133
Resisting moment: Mr = Sum Mr	= 8449
Factor of Safety of Overturning: Mr/Mo	= 2.70

Calculate eccentricity at base: with Surcharge / without Surcharge
Sum Moments = 5316 / 5316
Sum Vertical = 3207/3207
Base Length = 4.00
e = 0.342 / 0.342

Calculate Ultimate Bearing based on shear:
where:

Nq = 48.93
Nc = 61.35
Ng = 78.02 (ref. Vesic(1973, 1975) eqns)
Qult = 32604 psf

Equivalent footing width, B' = L -2e = 3.32 / 3.32
Bearing pressure = sumV/B' = 967 psf / 967 psf [bearing is greatest without liveload]
Factor of Safety for bearing = Qult/bearing= 33.70

Calculate Tensions in Reinforcing:
The tensions in the reinforcing layer, and the assumed load at the connection,
is the vertical area supported by each respective layer, Sv.Column [7] is '2c sqrt(ka)'.

Table of Results ppf

[1] Layer	[2] Depth zi	[3] h1	[4] ka/rho	[5] Pa	[6] (Pas+Pasd)	[7] c	[8] (5+6)cos(d)-7	[9] Ti	[10] Tcl	[11] Tsc
2	1.67	1.33	0.357/48	140	0	0	125	125	538	N/A
1	3.67	3.83	0.357/48	351	0	0	314	314	584	N/A

Calculate sliding on the reinforcing:

The shear value is the lessor of base-shear or inter-unit shear.

[1] Layer	[2] Depth zi	[3] N	[4] Li	[5] Cds	[6] τ	[7] RF	[8] ka	[9] Pa	[10] Pas+Pasd	[11] DF	[12] FS
2	*1.67*	*973*	*3.00*	*0.90*	*1035*	*1625*	*0.733*	*456*	*0*	*285*	*5.71*
1	*3.67*	*1912*	*3.00*	*0.90*	*1197*	*2358*	*0.733*	*1198*	*0*	*872*	*2.70*

Calculate pullout of each layer

The FoS (R*/S*) of pullout is calculated as the individual
layer pullout (Rf) divided by the tension (Df) in that layer.
The angle of the failure plane is: 28.00 degrees from vertical.

[1]	[2]	[3]	[4]	[5]	[6]	[7]	[8]
Layer	Depth zi	Le	SumV	Ci	POi	Ti	FS_PO
2	*1.67*	*1.46*	*457*	*0.90*	*554*	*125*	*4.44*
1	*3.67*	*2.38*	*1184*	*0.90*	*1437*	*314*	*4.58*

Check Shear & Bending at each layer

Bending on the top layer is the FOS of overturning of the Units
(Most surcharge loads need to be moved back from the face.)

[1]	*[2]*	*[3]*	*[4]*	*[5]*	*[6]*	*[7]*	*[8]*	*[9]*	
Layer	*Depth zi*	*Si*	*DM*	*Pv*	*RM*	*FS_b*	*DS*	*RS*	*FS_Sh*
2	*1.67*	*1.67*	*27*	*200*	*112*	*4.12*	*49*	*1035*	*21.23*
1	*3.67*	*2.00*	*53*	*320*	*259*	*4.93*	*111*	*1197*	*10.77*

RETAINING WALL DESIGN

KeyWall_2012 Version 3.7.2 Build 16

Project: *Villas at Winter Park*
Project No: *SCI14100CSD*
Case: *Case 8*
Design Method: *Rankine-w/Batter (modified soil interface)*

Date: *3/25/2016*
Designer: *H. McCutcheon*

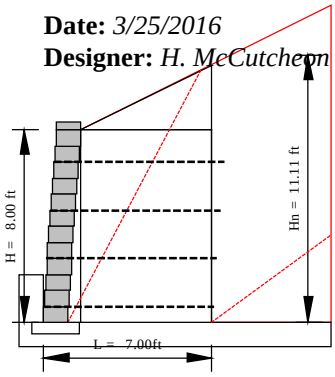

Design Parameters

Soil Parameters:

	ϕ deg	c psf	γ pcf
Reinforced Fill	*34*	*0*	*110*
Retained Zone	*27*	*50*	*120*
Foundation Soil	*38*	*50*	*130*

Reinforced Fill Type: *2.5" minus Crushed Stone or Gravel*
Unit Fill: *Crushed Stone, 1 inch minus*

Minimum Design Factors of Safety

sliding:	1.50	pullout:	1.50	uncertainties:	1.50
overturning:	1.50	shear:	1.50	connection:	1.50
bearing:	1.50	bending:	1.50		

Design Preferences

Reinforcing Parameters: *Strata-Grid Geogrids*

	Tult	RFcr	RFd	RFid	LTDS	FS	Tal	Ci	Cds
SG150	*1875*	*1.65*	*1.10*	*1.35*	*765*	*1.50*	*510*	*0.90*	*0.90*

Analysis: ***Case: Case 8***
6' Wall at Hackstown Street Extension Residence

Unit Type:	*CompacIII / 120.00 pcf*	*Wall Batter: 4.00 deg (Hinge Ht N/A)*
Leveling Pad:	*Crushed Stone*	
Wall Ht:	*8.00 ft*	*embedment: 2.00 ft*
BackSlope:	*26.57 deg. slope,*	*50.00 ft long*
Surcharge:	*LL: 0 psf uniform surcharge*	*DL: 0 psf uniform surcharge*
	Load Width: 0.00 ft	*Load Width: 0.00 ft*

Results:

	Sliding	Overturning	Bearing	Shear	Bending
Factors of Safety:	*1.51*	*2.77*	*29.25*	*6.23*	*4.46*

Calculated Bearing Pressure: *1557 / 1557 psf*
Eccentricity at base: 0.57 ft
Reinforcing: (ft & lbs/ft)

Layer	Height	Length	Calc. Tension	Reinf. Type	Allow Ten Tal	Pk Conn Tcl	Pullout FS
4	*6.67*	*7.0*	*96*	*SG150*	*510 ok*	*531 ok*	*>10 ok*
3	*4.67*	*7.0*	*234*	*SG150*	*510 ok*	*576 ok*	*>10 ok*
2	*2.67*	*7.0*	*374*	*SG150*	*510 ok*	*622 ok*	*>10 ok*
1	*0.67*	*7.0*	*419*	*SG150*	*510 ok*	*668 ok*	*>10 ok*

Reinforcing Quantities (no waste included):
SG150 3.11 sy/ft

NOTE: THESE CALCULATIONS ARE FOR PRELIMINARY DESIGN ONLY AND SHOULD NOT BE USED FOR CONSTRUCTION WITHOUT REVIEW BY A QUALIFIED ENGINEER

DETAILED CALCULATIONS

Project: *Villas at Winter Park* **Date:** *3/25/2016*
Project No: *SCI14100CSD* **Designer:** *H. McCutcheon*
Case: *Case 8*
Design Method: *Rankine-w/Batter (modified soil interface)*

Soil Parameters:	**ϕ deg**	**c psf**	**γ pcf**
Reinforced Fill	*34*	*0*	*110*
Retained Zone	*27*	*50*	*120*
Foundation Soil	*38*	*50*	*130*

Leveling Pad: ***Crushed Stone***

Modular Concrete Unit: *CompacIII*
Depth: *1.00 ft* **In-Place Wt:** *120 pcf*

Geometry

Internal Stability
(Sloping geometry)
Height: 8.00 ft
BackSlope:
Angle: 26.6 deg
Height: 25.01 ft
Batter: 4.00deg
Surcharge:
Dead Load: 0.00 psf
Live Load: 0 psf
Base width: 7.0 ft

External Stability
(Broken geometry)
Height: 11.11 ft
Angle: 26.6 deg
Height: 21.90 ft
Batter: 4.00deg
Dead Load: 0.00 psf
Live Load:0.00 psf

Earth Pressures:

$$k_a = \frac{\sin^2(\alpha+\phi)}{\sin^2\alpha\,\sin(\alpha-\delta)\left[1+\sqrt{\frac{\sin(\phi+\delta)\sin(\phi-\beta)}{\sin(\alpha-\delta)\sin(\alpha+\beta)}}\right]^2}$$

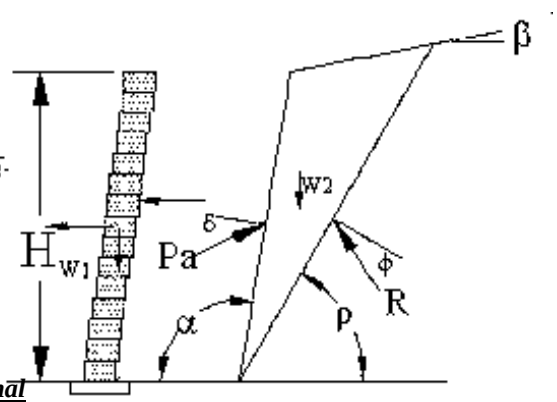

Internal		***External***	
ϕ	= 34 deg	ϕ	= 27 deg
α	= 94.00 deg	α	= 94.00 deg
β	= 26.57 deg	β	= 26.57 deg
δ	= 26.57 deg	δ	= 26.57 deg
H	= 8.00 ft		
ka	= 0.357	ka	= 0.680

Hinge Height: Hinge Ht= Not applicable

Reinforcing Parameters: *Strata-Grid Geogrids*

	Tult	RFcr	RFd	RFid	LTDS	FS	Tal	Ci	Cds
SG150	*1875*	*1.65*	*1.10*	*1.35*	*765*	*1.50*	*510*	*0.90*	*0.90*

Connection Parameters: Strata-Grid Geogrids

	Frictional 1	Break Pt	Frictional 2
SG150	*Tcl= Ntan(16.00) + 750*	*1609*	*Tcl= Ntan(0.00) +1211*

Unit Shear Data

Shear = N tan(40.00)
Inter-Unit ShearShear = N tan(34.00) + 900.00

Calculated Reactions

For the "modified" design method, the back of the mass assumed to be vertical for calculation of resisting forces.
effective sliding length = 7.00 ft

$Pa := 0.5H\cdot(\gamma\cdot H\cdot ka - 2c\cdot\sqrt{ka})$ $\quad P_q := q\cdot H\cdot ka$

$Pa_h := Pa\cdot\cos(\delta)$ $\quad Pq_h := P_q\cdot\cos(\delta)$

$Pa_v := Pa\cdot\sin(\delta)$ $\quad Pq_v := P_q\cdot\sin(\delta)$

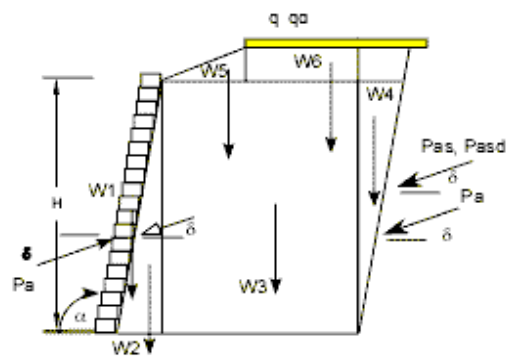

Reactions are:

Area	Force	Arm-x	Arm-y	Moment
W1	*960.00*	*[0.780]*	*4.000*	*748.52*
W2	*246.14*	*[1.373]*	*2.667*	*337.94*
W3	*4787.72*	*[4.280]*	*4.000*	*20490.02*
W5	*888.19*	*[5.186]*	*8.907*	*4606.58*
Pa_h	*4091.90*	*7.000*	*[3.703]*	*-15152.84*
Pa_v	*2251.23*	*[7.000]*	*3.703*	*15758.58*
Sum V =	*9133.27*		*Sum Mr =*	*41941.64*
Sum H =	*4091.90*		*Sum Mo =*	*-15152.84*

Calculate Sliding at Base

For Sliding, Vertical Force = W1+W2+W3+W4+W5+W6+qd	= 9133
The resisting force within the rein. mass , Rf_1	= N tan(34)
	= 6160
The resisting force at the foundation, Rf_2	= N tan(38) + (7.00 x 50.00)
	= 7486
The driving forces, Df, are the sum of the external earth pressures:	
Pa_h + Pql_h + Pqd_h	= 4092
the Factor of Safety for Sliding is Rf_1/Df	= 1.51

Calculate Overturning:

Overturning moment: Mo = Sum Mo	= -15153
Resisting moment: Mr = Sum Mr	= 41942
Factor of Safety of Overturning: Mr/Mo	= 2.77

Calculate eccentricity at base: with Surcharge / without Surcharge
Sum Moments = 26789 / 26789
Sum Vertical = 9133/9133
Base Length = 7.00
e = 0.567 / 0.567

Calculate Ultimate Bearing based on shear:
where:

Nq = 48.93
Nc = 61.35
Ng = 78.02 (ref. Vesic(1973, 1975) eqns)
Qult = 45541 psf

Equivalent footing width, B' = L -2e = 5.87 / 5.87
Bearing pressure = sumV/B' = 1557 psf / 1557 psf [bearing is greatest without liveload]
Factor of Safety for bearing = Qult/bearing= 29.25

Calculate Tensions in Reinforcing:
The tensions in the reinforcing layer, and the assumed load at the connection,
is the vertical area supported by each respective layer, Sv.Column [7] is '2c sqrt(ka)'.

Table of Results ppf

[1] Layer	[2] Depth zi	[3] h1	[4] ka/rho	[5] Pa	[6] (Pas+Pasd)	[7] c	[8] (5+6)cos(d)-7	[9] Ti	[10] Tcl	[11] Tsc
4	1.33	1.17	0.357/48	107	0	0	96	96	531	N/A
3	3.33	3.33	0.357/48	262	0	0	234	234	576	N/A
2	5.33	5.33	0.357/48	419	0	0	374	374	622	N/A
1	7.33	7.17	0.357/48	469	0	0	419	419	668	N/A

Calculate sliding on the reinforcing:

The shear value is the lessor of base-shear or inter-unit shear.

[1] Layer	[2] Depth zi	[3] N	[4] Li	[5] Cds	[6] τ	[7] RF	[8] ka	[9] Pa	[10] Pas+Pasd	[11] DF	[12] FS
4	*1.33*	*2228*	*6.00*	*0.90*	*1008*	*2361*	*0.738*	*874*	*0*	*611*	*3.87*
3	*3.33*	*3909*	*6.00*	*0.90*	*1170*	*3543*	*0.727*	*1812*	*0*	*1375*	*2.58*
2	*5.33*	*5679*	*6.00*	*0.90*	*1332*	*4779*	*0.706*	*3018*	*0*	*2382*	*2.01*
1	*7.33*	*7523*	*6.00*	*0.90*	*1494*	*6060*	*0.681*	*4457*	*0*	*3601*	*1.68*

Calculate pullout of each layer

The FoS (R*/S*) of pullout is calculated as the individual
layer pullout (Rf) divided by the tension (Df) in that layer.
The angle of the failure plane is: 28.00 degrees from vertical.

[1]	[2]	[3]	[4]	[5]	[6]	[7]	[8]
Layer	Depth zi	Le	SumV	Ci	POi	Ti	FS_PO
4	*1.33*	*2.92*	*1208*	*0.90*	*1467*	*96*	*15.35*
3	*3.33*	*3.85*	*2297*	*0.90*	*2789*	*234*	*11.92*
2	*5.33*	*4.77*	*3726*	*0.90*	*4523*	*374*	*12.08*
1	*7.33*	*5.69*	*5494*	*0.90*	*6670*	*419*	*15.91*

Check Shear & Bending at each layer

Bending on the top layer is the FOS of overturning of the Units
(Most surcharge loads need to be moved back from the face.)

[1]	*[2]*	*[3]*	*[4]*	*[5]*	*[6]*	*[7]*	*[8]*	*[9]*	
Layer	*Depth zi*	*Si*	*DM*	*Pv*	*RM*	*FS_b*	*DS*	*RS*	*FS_Sh*
4	*1.33*	*1.33*	*14*	*160*	*87*	*6.31*	*31*	*1008*	*32.31*
3	*3.33*	*2.00*	*47*	*280*	*235*	*5.03*	*99*	*1170*	*11.76*
2	*5.33*	*2.00*	*82*	*520*	*379*	*4.62*	*170*	*1332*	*7.85*
1	*7.33*	*2.00*	*117*	*760*	*522*	*4.46*	*240*	*1494*	*6.23*

RETAINING WALL DESIGN

KeyWall_2012 Version 3.7.2 Build 16

Project: *Villas at Winter Park*
Project No: *SCI14100CSD*
Case: *Case 9*
Design Method: *Rankine-w/Batter (modified soil interface)*

Date: *3/25/2016*
Designer: *H. McCutcheon*

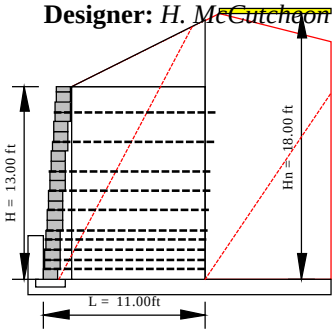

Design Parameters

Soil Parameters:

	ϕ deg	c psf	γ pcf
Reinforced Fill	*34*	*0*	*110*
Retained Zone	*27*	*50*	*120*
Foundation Soil	*38*	*50*	*130*

Reinforced Fill Type: *2.5" minus Crushed Stone or Gravel*
Unit Fill: *Crushed Stone, 1 inch minus*

Minimum Design Factors of Safety

sliding:	1.50	pullout:	1.50	uncertainties:	1.50
overturning:	1.50	shear:	1.50	connection:	1.50
bearing:	1.50	bending:	1.50		

Design Preferences

Reinforcing Parameters: *Strata-Grid Geogrids*

	Tult	RFcr	RFd	RFid	LTDS	FS	Tal	Ci	Cds
SG150	*1875*	*1.65*	*1.10*	*1.35*	*765*	*1.50*	*510*	*0.90*	*0.90*

Analysis: ***Case: Case 9***
Embankment Wall at Hackstown Street Extension

Unit Type:	*CompacIII / 120.00 pcf*	*Wall Batter: 4.00 deg (Hinge Ht N/A)*
Leveling Pad:	*Crushed Stone*	
Wall Ht:	*13.00 ft*	*embedment: 3.00 ft*
BackSlope:	*26.57 deg. slope,*	*10.00 ft long*
Surcharge:	*LL: 250 psf uniform surcharge*	*DL: 0 psf uniform surcharge*
	Load Width: 20.00 ft	*Load Width: 0.00 ft*

Results:

	Sliding	Overturning	Bearing	Shear	Bending
Factors of Safety:	*1.50*	*2.04*	*18.45*	*6.82*	*3.75*

Calculated Bearing Pressure: *2885 / 2885 psf*
Eccentricity at base: 2.43 ft
Reinforcing: (ft & lbs/ft)

Layer	Height	Length	Calc. Tension	Reinf. Type	Allow Ten Tal	Pk Conn Tcl	Pullout FS
10	*11.33*	*11.0*	*137*	*SG150*	*510 ok*	*538 ok*	*>10 ok*
9	*9.33*	*11.0*	*283*	*SG150*	*510 ok*	*584 ok*	*>10 ok*
8	*7.33*	*11.0*	*354*	*SG150*	*510 ok*	*630 ok*	*>10 ok*
7	*6.00*	*11.0*	*360*	*SG150*	*510 ok*	*661 ok*	*>10 ok*
6	*4.67*	*11.0*	*424*	*SG150*	*510 ok*	*691 ok*	*>10 ok*
5	*3.33*	*11.0*	*364*	*SG150*	*510 ok*	*722 ok*	*>10 ok*
4	*2.67*	*11.0*	*261*	*SG150*	*510 ok*	*737 ok*	*>10 ok*
3	*2.00*	*11.0*	*276*	*SG150*	*510 ok*	*752 ok*	*>10 ok*
2	*1.33*	*11.0*	*293*	*SG150*	*510 ok*	*768 ok*	*>10 ok*
1	*0.67*	*11.0*	*467*	*SG150*	*510 ok*	*783 ok*	*>10 ok*

Reinforcing Quantities (no waste included):
SG150 12.22 sy/ft

NOTE: THESE CALCULATIONS ARE FOR PRELIMINARY DESIGN ONLY AND SHOULD NOT BE USED FOR CONSTRUCTION WITHOUT REVIEW BY A QUALIFIED ENGINEER

DETAILED CALCULATIONS

Project: *Villas at Winter Park* **Date:** *3/25/2016*
Project No: *SCI14100CSD* **Designer:** *H. McCutcheon*
Case: *Case 9*
Design Method: *Rankine-w/Batter (modified soil interface)*

Soil Parameters:	**ϕ deg**	**c psf**	**γ pcf**
Reinforced Fill	*34*	*0*	*110*
Retained Zone	*27*	*50*	*120*
Foundation Soil	*38*	*50*	*130*

Leveling Pad: ***Crushed Stone***

Modular Concrete Unit: *CompacIII*
Depth: *1.00 ft* **In-Place Wt:** *120 pcf*

Geometry

Internal Stability
(Broken geometry)
Height: 13.00 ft
BackSlope:
Angle: 26.6 deg
Height: 5.00 ft
Batter: 4.00deg
Surcharge:
Dead Load: 0.00 psf
Live Load: 250.00 psf
Base width: 11.0 ft

External Stability
(Broken geometry)
Height: 18.00 ft
Angle: 0.00 deg
Height: 0.00 ft
Batter: 4.00deg
Dead Load: 0.00 psf
Live Load:250.00 psf

Earth Pressures:

$$k_a = \frac{\sin^2(\alpha+\phi)}{\sin^2\alpha\,\sin(\alpha-\delta)\left[1+\sqrt{\frac{\sin(\phi+\delta)\sin(\phi-\beta)}{\sin(\alpha-\delta)\sin(\alpha+\beta)}}\right]^2}$$

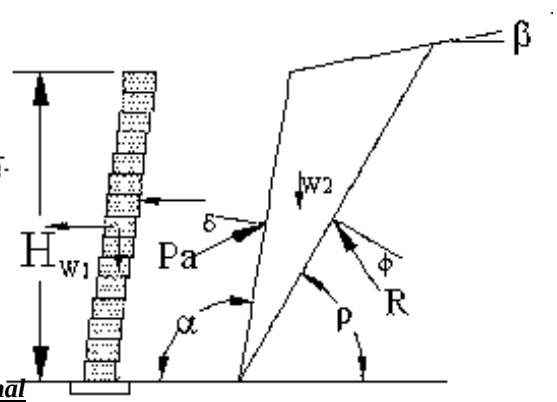

Internal		***External***	
ϕ	= 34 deg	ϕ	= 27 deg
α	= 94.00 deg	α	= 94.00 deg
β	= 26.57 deg	β	= 26.57 deg
δ	= 10.89 deg	δ	= 0.00 deg
H	= 13.00 ft		
ka	= 0.330	ka	= 0.356

Hinge Height: Hinge Ht= Not applicable

Reinforcing Parameters: *Strata-Grid Geogrids*

	Tult	RFcr	RFd	RFid	LTDS	FS	Tal	Ci	Cds
SG150	*1875*	*1.65*	*1.10*	*1.35*	*765*	*1.50*	*510*	*0.90*	*0.90*

Connection Parameters: Strata-Grid Geogrids

	Frictional 1	Break Pt	Frictional 2
SG150	*Tcl= Ntan(16.00) + 750*	*1609*	*Tcl= Ntan(0.00) +1211*

Unit Shear Data

Shear = N tan(40.00)
Inter-Unit ShearShear = N tan(34.00) + 900.00

Calculated Reactions

For the "modified" design method, the back of the mass assumed to be vertical for calculation of resisting forces.
effective sliding length = 11.00 ft

$Pa := 0.5H\cdot(\gamma\cdot H\cdot ka - 2c\cdot\sqrt{ka})$ $\quad P_q := q\cdot H\cdot ka$

$Pa_h := Pa\cdot\cos(\delta)$ $\quad Pq_h := P_q\cdot\cos(\delta)$

$Pa_v := Pa\cdot\sin(\delta)$ $\quad Pq_v := P_q\cdot\sin(\delta)$

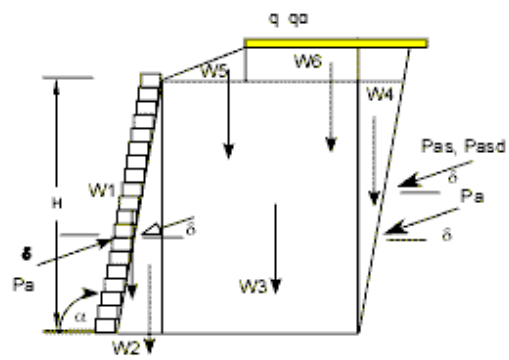

Reactions are:

Area	Force	Arm-x	Arm-y	Moment
W1	*1560.00*	*[0.955]*	*6.500*	*1489.06*
W2	*649.97*	*[1.606]*	*4.333*	*1043.87*
W3	*13000.06*	*[6.455]*	*6.500*	*83909.21*
W5	*2479.90*	*[7.970]*	*14.515*	*19763.99*
Pa_h	*6482.01*	*11.000*	*[6.000]*	*-38894.38*
Pql_h	*1453.66*	*11.000*	*[9.001]*	*-13083.76*
Sum V =	*17689.93*		*Sum Mr =*	*106206.14*
Sum H =	*7935.67*		*Sum Mo =*	*-51978.13*

Calculate Sliding at Base

For Sliding, Vertical Force = W1+W2+W3+W4+W5+W6+qd	= 17690
The resisting force within the rein. mass , Rf_1	= N tan(34)
	= 11932
The resisting force at the foundation, Rf_2	= N tan(38) + (11.00 x 50.00)
	= 14371
The driving forces, Df, are the sum of the external earth pressures:	
Pa_h + Pql_h + Pqd_h	= 7936
the Factor of Safety for Sliding is Rf_1/Df	= 1.50

Calculate Overturning:

Overturning moment: Mo = Sum Mo	= -51978
Resisting moment: Mr = Sum Mr	= 106206
Factor of Safety of Overturning: Mr/Mo	= 2.04

Calculate eccentricity at base: with Surcharge / without Surcharge
Sum Moments = 54228 / 54228
Sum Vertical = 17690/17690
Base Length = 11.00
e = 2.435 / 2.435

Calculate Ultimate Bearing based on shear:
where:

Nq = 48.93
Nc = 61.35
Ng = 78.02 (ref. Vesic(1973, 1975) eqns)
Qult = 53245 psf

Equivalent footing width, B' = L -2e = 6.13 / 6.13
Bearing pressure = sumV/B' = 2885 psf / 2885 psf [bearing is greatest without liveload]
Factor of Safety for bearing = Qult/bearing= 18.45

Calculate Tensions in Reinforcing:
The tensions in the reinforcing layer, and the assumed load at the connection,
is the vertical area supported by each respective layer, Sv.Column [7] is '2c sqrt(ka)'.

Table of Results ppf

[1] Layer	[2] Depth zi	[3] h1	[4] ka/rho	[5] Pa	[6] (Pas+Pasd)	[7] c	[8] (5+6)cos(d)-7	[9] Ti	[10] Tcl	[11] Tsc
10	1.67	1.33	0.357/50	140	0	0	137	137	538	N/A
9	3.67	3.67	0.357/50	288	0	0	283	283	584	N/A
8	5.67	5.50	0.357/50	360	0	0	354	354	630	N/A
7	7.00	7.00	0.349/48	358	8	0	360	360	661	N/A
6	8.33	8.33	0.339/48	414	17	0	424	424	691	N/A
5	9.67	9.50	0.342/50	357	13	0	364	364	722	N/A
4	10.33	10.33	0.337/50	255	11	0	261	261	737	N/A
3	11.00	11.00	0.333/50	268	12	0	276	276	752	N/A
2	11.67	11.67	0.337/52	288	11	0	293	293	768	N/A
1	12.33	12.50	0.333/52	458	18	0	467	467	783	N/A

Calculate sliding on the reinforcing:

The shear value is the lessor of base-shear or inter-unit shear.

[1] Layer	[2] Depth zi	[3] N	[4] Li	[5] Cds	[6] τ	[7] RF	[8] ka	[9] Pa	[10] Pas+Pasd	[11] DF	[12] FS
10	*1.67*	*4519*	*10.00*	*0.90*	*1035*	*3778*	*0.356*	*950*	*593*	*1344*	*2.81*
9	*3.67*	*6640*	*10.00*	*0.90*	*1197*	*5227*	*0.356*	*1605*	*771*	*2117*	*2.47*
8	*5.67*	*8730*	*10.00*	*0.90*	*1359*	*6658*	*0.356*	*2430*	*949*	*3062*	*2.17*
7	*7.00*	*10106*	*10.00*	*0.90*	*1467*	*7601*	*0.356*	*3076*	*1068*	*3786*	*2.01*
6	*8.33*	*11468*	*10.00*	*0.90*	*1575*	*8537*	*0.356*	*3797*	*1183*	*4583*	*1.86*
5	*9.67*	*12817*	*10.00*	*0.90*	*1682*	*9463*	*0.356*	*4595*	*1289*	*5446*	*1.74*
4	*10.33*	*13487*	*10.00*	*0.90*	*1736*	*9924*	*0.356*	*5022*	*1341*	*5906*	*1.68*
3	*11.00*	*14153*	*10.00*	*0.90*	*1790*	*10382*	*0.356*	*5468*	*1394*	*6385*	*1.63*
2	*11.67*	*14815*	*10.00*	*0.90*	*1844*	*10838*	*0.356*	*5933*	*1447*	*6883*	*1.57*
1	*12.33*	*15474*	*10.00*	*0.90*	*1898*	*11292*	*0.356*	*6418*	*1499*	*7400*	*1.53*

Calculate pullout of each layer

The FoS (R*/S*) of pullout is calculated as the individual
layer pullout (Rf) divided by the tension (Df) in that layer.
The angle of the failure plane is: 28.00 degrees from vertical.

[1] Layer	[2] Depth zi	[3] Le	[4] SumV	[5] Ci	[6] POi	[7] Ti	[8] FS_PO
10	*1.67*	*4.77*	*3019*	*0.90*	*3666*	*137*	*26.73*
9	*3.67*	*5.69*	*4651*	*0.90*	*5646*	*283*	*19.96*
8	*5.67*	*6.61*	*6622*	*0.90*	*8040*	*354*	*22.74*
7	*7.00*	*7.23*	*8124*	*0.90*	*9864*	*360*	*27.43*
6	*8.33*	*7.85*	*9778*	*0.90*	*11872*	*424*	*28.02*
5	*9.67*	*8.46*	*11583*	*0.90*	*14063*	*364*	*38.66*
4	*10.33*	*8.77*	*12542*	*0.90*	*15227*	*261*	*58.29*
3	*11.00*	*9.08*	*13539*	*0.90*	*16437*	*276*	*59.63*
2	*11.67*	*9.38*	*14573*	*0.90*	*17693*	*293*	*60.29*
1	*12.33*	*9.69*	*15645*	*0.90*	*18995*	*467*	*40.63*

Check Shear & Bending at each layer

Bending on the top layer is the FOS of overturning of the Units
(Most surcharge loads need to be moved back from the face.)

[1] Layer	*[2] Depth zi*	*[3] Si*	*[4] DM*	*[5] Pv*	*[6] RM*	*[7] FS_b*	*[8] DS*	*[9] RS*	*FS_Sh*
10	*1.67*	*1.67*	*30*	*200*	*112*	*3.75*	*54*	*1035*	*19.32*
9	*3.67*	*2.00*	*58*	*320*	*259*	*4.48*	*122*	*1197*	*9.80*
8	*5.67*	*2.00*	*96*	*560*	*403*	*4.18*	*199*	*1359*	*6.82*
7	*7.00*	*1.33*	*56*	*760*	*515*	*9.18*	*171*	*1467*	*8.58*
6	*8.33*	*1.33*	*67*	*920*	*614*	*9.15*	*204*	*1575*	*7.71*
5	*9.67*	*1.33*	*78*	*1080*	*713*	*9.12*	*237*	*1682*	*7.08*
4	*10.33*	*0.67*	*21*	*1200*	*793*	*37.14*	*129*	*1736*	*13.49*
3	*11.00*	*0.67*	*23*	*1280*	*844*	*37.37*	*136*	*1790*	*13.14*
2	*11.67*	*0.67*	*24*	*1360*	*896*	*37.43*	*144*	*1844*	*12.78*
1	*12.33*	*0.67*	*25*	*1440*	*947*	*37.50*	*152*	*1898*	*12.47*

RETAINING WALL DESIGN

KeyWall_2012 Version 3.7.2 Build 16

Project: *Villas at Winter Park*
Project No: *SCI14100CSD*
Case: *Case 10*
Design Method: *Rankine-w/Batter (modified soil interface)*

Date: *3/25/2016*
Designer: *H. McCutcheon*

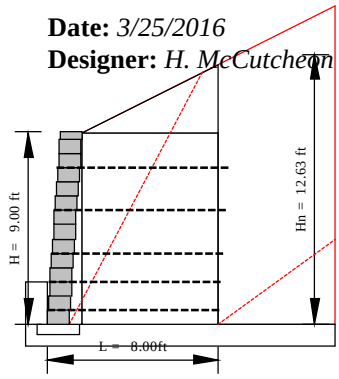

Design Parameters

Soil Parameters:	**ϕ deg**	**c psf**	**γ pcf**
Reinforced Fill	*34*	*0*	*110*
Retained Zone	*27*	*50*	*120*
Foundation Soil	*38*	*50*	*130*

Reinforced Fill Type: *2.5" minus Crushed Stone or Gravel*
Unit Fill: *Crushed Stone, 1 inch minus*

Minimum Design Factors of Safety

sliding:	1.50	pullout:	1.50	uncertainties:	1.50
overturning:	1.50	shear:	1.50	connection:	1.50
bearing:	1.50	bending:	1.50		

Design Preferences

Reinforcing Parameters: *Strata-Grid Geogrids*

	Tult	*RFcr*	*RFd*	*RFid*	*LTDS*	*FS*	*Tal*	*Ci*	*Cds*
SG150	*1875*	*1.65*	*1.10*	*1.35*	*765*	*1.50*	*510*	*0.90*	*0.90*

Analysis: ***Case: Case 10***
7' Wall at Magdalene Street Extension Residence

Unit Type:	*CompacIII / 120.00 pcf*	*Wall Batter: 4.00 deg (Hinge Ht N/A)*
Leveling Pad:	*Crushed Stone*	
Wall Ht:	*9.00 ft*	*embedment: 2.00 ft*
BackSlope:	*26.57 deg. slope,*	*50.00 ft long*
Surcharge:	*LL: 0 psf uniform surcharge*	*DL: 0 psf uniform surcharge*
	Load Width: 0.00 ft	*Load Width: 0.00 ft*

Results:	***Sliding***	***Overturning***	***Bearing***	***Shear***	***Bending***
Factors of Safety:	*1.52*	*2.80*	*28.56*	*7.49*	*4.12*

Calculated Bearing Pressure: *1748 / 1748 psf*
Eccentricity at base: 0.63 ft
Reinforcing: (ft & lbs/ft)

Layer	**Height**	**Length**	**Calc. Tension**	**Reinf. Type**	**Allow Ten Tal**	**Pk Conn Tcl**	**Pullout FS**
5	*7.33*	*8.0*	*125*	*SG150*	*510 ok*	*538 ok*	*>10 ok*
4	*5.33*	*8.0*	*257*	*SG150*	*510 ok*	*584 ok*	*>10 ok*
3	*3.33*	*8.0*	*322*	*SG150*	*510 ok*	*630 ok*	*>10 ok*
2	*2.00*	*8.0*	*328*	*SG150*	*510 ok*	*661 ok*	*>10 ok*
1	*0.67*	*8.0*	*390*	*SG150*	*510 ok*	*691 ok*	*>10 ok*

Reinforcing Quantities (no waste included):
SG150 4.44 sy/ft

NOTE: THESE CALCULATIONS ARE FOR PRELIMINARY DESIGN ONLY AND SHOULD NOT BE USED FOR CONSTRUCTION WITHOUT REVIEW BY A QUALIFIED ENGINEER

DETAILED CALCULATIONS

Project: *Villas at Winter Park* **Date:** *3/25/2016*
Project No: *SCI14100CSD* **Designer:** *H. McCutcheon*
Case: *Case 10*
Design Method: *Rankine-w/Batter (modified soil interface)*

Soil Parameters:	**ϕ deg**	**c psf**	**γ pcf**
Reinforced Fill	*34*	*0*	*110*
Retained Zone	*27*	*50*	*120*
Foundation Soil	*38*	*50*	*130*

Leveling Pad: ***Crushed Stone***

Modular Concrete Unit: *CompacIII*
Depth: *1.00 ft* **In-Place Wt:** *120 pcf*

Geometry

Internal Stability
(Sloping geometry)
Height: 9.00 ft
BackSlope:
Angle: 26.6 deg
Height: 25.01 ft
Batter: 4.00deg
Surcharge:
Dead Load: 0.00 psf
Live Load: 0 psf
Base width: 8.0 ft

External Stability
(Broken geometry)
Height: 12.63 ft
Angle: 26.6 deg
Height: 21.38 ft
Batter: 4.00deg
Dead Load: 0.00 psf
Live Load:0.00 psf

Earth Pressures:

$$k_a = \frac{\sin^2(\alpha+\phi)}{\sin^2\alpha\,\sin(\alpha-\delta)\left[1+\sqrt{\frac{\sin(\phi+\delta)\sin(\phi-\beta)}{\sin(\alpha-\delta)\sin(\alpha+\beta)}}\right]^2}$$

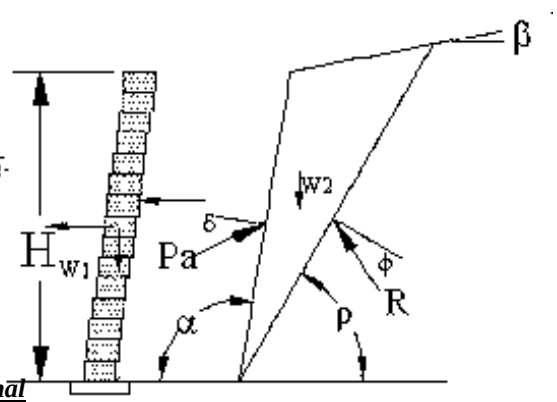

Internal		***External***	
ϕ	= 34 deg	ϕ	= 27 deg
α	= 94.00 deg	α	= 94.00 deg
β	= 26.57 deg	β	= 26.57 deg
δ	= 26.57 deg	δ	= 26.57 deg
H	= 9.00 ft		
ka	= 0.357	ka	= 0.666

Hinge Height: Hinge Ht= Not applicable

Reinforcing Parameters: *Strata-Grid Geogrids*

	Tult	RFcr	RFd	RFid	LTDS	FS	Tal	Ci	Cds
SG150	*1875*	*1.65*	*1.10*	*1.35*	*765*	*1.50*	*510*	*0.90*	*0.90*

Connection Parameters: Strata-Grid Geogrids

	Frictional 1	Break Pt	Frictional 2
SG150	*Tcl= Ntan(16.00) + 750*	*1609*	*Tcl= Ntan(0.00) +1211*

Unit Shear Data

Shear = N tan(40.00)
Inter-Unit ShearShear = N tan(34.00) + 900.00

Calculated Reactions

For the "modified" design method, the back of the mass assumed to be vertical for calculation of resisting forces.
effective sliding length = 8.00 ft

$$Pa := 0.5H\cdot\left(\gamma\cdot H\cdot ka - 2c\cdot\sqrt{ka}\right) \qquad P_q := q\cdot H\cdot ka$$

$$Pa_h := Pa\cdot\cos(\delta) \qquad Pq_h := P_q\cdot\cos(\delta)$$

$$Pa_v := Pa\cdot\sin(\delta) \qquad Pq_v := P_q\cdot\sin(\delta)$$

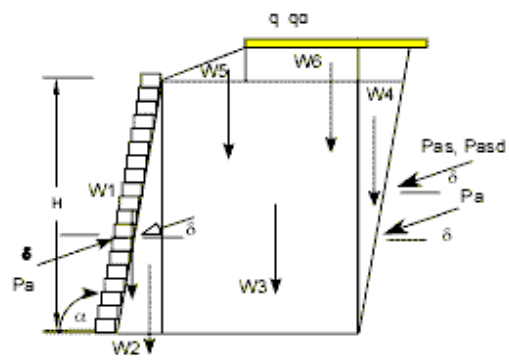

Reactions are:

Area	Force	Arm-x	Arm-y	Moment
W1	*1080.00*	*[0.815]*	*4.500*	*879.84*
W2	*311.52*	*[1.420]*	*3.000*	*442.23*
W3	*6306.95*	*[4.815]*	*4.500*	*30365.90*
W5	*1217.82*	*[5.876]*	*10.062*	*7156.46*
Pa_h	*5236.95*	*8.000*	*[4.209]*	*-22043.42*
Pa_v	*2849.49*	*[8.000]*	*4.209*	*22795.92*
Sum V =	*11765.79*		*Sum Mr =*	*61640.35*
Sum H =	*5236.95*		*Sum Mo =*	*-22043.42*

Calculate Sliding at Base

For Sliding, Vertical Force = W1+W2+W3+W4+W5+W6+qd	= 11766
The resisting force within the rein. mass , Rf_1	= N tan(34)
	= 7936
The resisting force at the foundation, Rf_2	= N tan(38) + (8.00 x 50.00)
	= 9592
The driving forces, Df, are the sum of the external earth pressures:	
Pa_h + Pql_h + Pqd_h	= 5237
the Factor of Safety for Sliding is Rf_1/Df	= 1.52

Calculate Overturning:

Overturning moment: Mo = Sum Mo	= -22043
Resisting moment: Mr = Sum Mr	= 61640
Factor of Safety of Overturning: Mr/Mo	= 2.80

Calculate eccentricity at base: with Surcharge / without Surcharge
Sum Moments = 39597 / 39597
Sum Vertical = 11766/11766
Base Length = 8.00
e = 0.635 / 0.635

Calculate Ultimate Bearing based on shear:
where:

Nq = 48.93
Nc = 61.35
Ng = 78.02 (ref. Vesic(1973, 1975) eqns)
Qult = 49926 psf

Equivalent footing width, B' = L -2e = 6.73 / 6.73
Bearing pressure = sumV/B' = 1748 psf / 1748 psf [bearing is greatest without liveload]
Factor of Safety for bearing = Qult/bearing= 28.56

Calculate Tensions in Reinforcing:
The tensions in the reinforcing layer, and the assumed load at the connection,
is the vertical area supported by each respective layer, Sv.Column [7] is '2c sqrt(ka)'.

Table of Results ppf

[1] Layer	[2] Depth zi	[3] h1	[4] ka/rho	[5] Pa	[6] (Pas+Pasd)	[7] c	[8] (5+6)cos(d)-7	[9] Ti	[10] Tcl	[11] Tsc
5	1.67	1.33	0.357/48	140	0	0	125	125	538	N/A
4	3.67	3.67	0.357/48	288	0	0	257	257	584	N/A
3	5.67	5.50	0.357/48	360	0	0	322	322	630	N/A
2	7.00	7.00	0.357/48	366	0	0	328	328	661	N/A
1	8.33	8.33	0.357/48	436	0	0	390	390	691	N/A

Calculate sliding on the reinforcing:

The shear value is the lessor of base-shear or inter-unit shear.

[1] Layer	[2] Depth zi	[3] N	[4] Li	[5] Cds	[6] τ	[7] RF	[8] ka	[9] Pa	[10] Pas+Pasd	[11] DF	[12] FS
5	*1.67*	*3140*	*7.00*	*0.90*	*1035*	*2941*	*0.733*	*1232*	*0*	*899*	*3.27*
4	*3.67*	*5069*	*7.00*	*0.90*	*1197*	*4274*	*0.706*	*2255*	*0*	*1743*	*2.45*
3	*5.67*	*7116*	*7.00*	*0.90*	*1359*	*5678*	*0.696*	*3608*	*0*	*2880*	*1.97*
2	*7.00*	*8508*	*7.00*	*0.90*	*1467*	*6632*	*0.680*	*4611*	*0*	*3732*	*1.78*
1	*8.33*	*9958*	*7.00*	*0.90*	*1575*	*7620*	*0.673*	*5773*	*0*	*4724*	*1.61*

Calculate pullout of each layer

The FoS (R*/S*) of pullout is calculated as the individual
layer pullout (Rf) divided by the tension (Df) in that layer.
The angle of the failure plane is: 28.00 degrees from vertical.

[1] Layer	[2] Depth zi	[3] Le	[4] SumV	[5] Ci	[6] POi	[7] Ti	[8] FS_PO
5	*1.67*	*3.61*	*1763*	*0.90*	*2141*	*125*	*17.16*
4	*3.67*	*4.54*	*3048*	*0.90*	*3701*	*257*	*14.38*
3	*5.67*	*5.46*	*4673*	*0.90*	*5674*	*322*	*17.64*
2	*7.00*	*6.08*	*5945*	*0.90*	*7218*	*328*	*22.04*
1	*8.33*	*6.69*	*7368*	*0.90*	*8945*	*390*	*22.94*

Check Shear & Bending at each layer

Bending on the top layer is the FOS of overturning of the Units
(Most surcharge loads need to be moved back from the face.)

[1] Layer	*[2] Depth zi*	*[3] Si*	*[4] DM*	*[5] Pv*	*[6] RM*	*[7] FS_b*	*[8] DS*	*[9] RS*	*FS_Sh*
5	*1.67*	*1.67*	*27*	*200*	*112*	*4.12*	*49*	*1035*	*21.23*
4	*3.67*	*2.00*	*53*	*320*	*259*	*4.93*	*111*	*1197*	*10.77*
3	*5.67*	*2.00*	*88*	*560*	*403*	*4.59*	*181*	*1359*	*7.49*
2	*7.00*	*1.33*	*51*	*760*	*515*	*10.07*	*156*	*1467*	*9.40*
1	*8.33*	*1.33*	*62*	*920*	*614*	*9.98*	*187*	*1575*	*8.41*

RETAINING WALL DESIGN

KeyWall_2012 Version 3.7.2 Build 16

Project: *Villas at Winter Park*
Project No: *SCI14100CSD*
Case: *Case 11*
Design Method: *Rankine-w/Batter (modified soil interface)*

Date: *3/25/2016*
Designer: *H. McCutcheon*

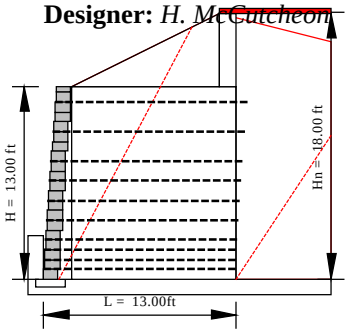

Design Parameters

Soil Parameters:

	ϕ deg	c psf	γ pcf
Reinforced Fill	*34*	*0*	*110*
Retained Zone	*27*	*50*	*120*
Foundation Soil	*38*	*50*	*130*

Reinforced Fill Type: *2.5" minus Crushed Stone or Gravel*
Unit Fill: *Crushed Stone, 1 inch minus*

Minimum Design Factors of Safety

sliding:	1.50	pullout:	1.50	uncertainties:	1.50
overturning:	1.50	shear:	1.50	connection:	1.50
bearing:	1.50	bending:	1.50		

Design Preferences

Reinforcing Parameters: *Strata-Grid Geogrids*

	Tult	RFcr	RFd	RFid	LTDS	FS	Tal	Ci	Cds
SG150	*1875*	*1.65*	*1.10*	*1.35*	*765*	*1.50*	*510*	*0.90*	*0.90*

Analysis: ***Case: Case 11***
10' Lower wall at Magdalene Street Extension Residence

Unit Type:	*CompacIII / 120.00 pcf*	*Wall Batter: 4.00 deg (Hinge Ht N/A)*
Leveling Pad:	*Crushed Stone*	
Wall Ht:	*13.00 ft*	*embedment: 3.00 ft*
BackSlope:	*26.57 deg. slope,*	*10.00 ft long*
Surcharge:	*LL: 0 psf uniform surcharge*	*DL: 500 psf uniform surcharge*
	Load Width: 0.00 ft	*Load Width: 50.00 ft*

Results:

	Sliding	Overturning	Bearing	Shear	Bending
Factors of Safety:	*1.56*	*2.42*	*24.98*	*6.65*	*4.44*

Calculated Bearing Pressure: *2616 / 2616 psf*
Eccentricity at base: 2.24 ft
Reinforcing: (ft & lbs/ft)

Layer	Height	Length	Calc. Tension	Reinf. Type	Allow Ten Tal	Pk Conn Tcl	Pullout FS
10	*12.00*	*13.0*	*77*	*SG150*	*510 ok*	*523 ok*	*>10 ok*
9	*10.00*	*13.0*	*231*	*SG150*	*510 ok*	*569 ok*	*>10 ok*
8	*8.00*	*13.0*	*289*	*SG150*	*510 ok*	*615 ok*	*>10 ok*
7	*6.67*	*13.0*	*320*	*SG150*	*510 ok*	*645 ok*	*>10 ok*
6	*5.33*	*13.0*	*399*	*SG150*	*510 ok*	*676 ok*	*>10 ok*
5	*4.00*	*13.0*	*474*	*SG150*	*510 ok*	*706 ok*	*>10 ok*
4	*2.67*	*13.0*	*396*	*SG150*	*510 ok*	*737 ok*	*>10 ok*
3	*2.00*	*13.0*	*288*	*SG150*	*510 ok*	*752 ok*	*>10 ok*
2	*1.33*	*13.0*	*303*	*SG150*	*510 ok*	*768 ok*	*>10 ok*
1	*0.67*	*13.0*	*482*	*SG150*	*510 ok*	*783 ok*	*>10 ok*

Reinforcing Quantities (no waste included):
SG150 14.44 sy/ft

NOTE: THESE CALCULATIONS ARE FOR PRELIMINARY DESIGN ONLY AND SHOULD NOT BE USED FOR CONSTRUCTION WITHOUT REVIEW BY A QUALIFIED ENGINEER

DETAILED CALCULATIONS

Project: *Villas at Winter Park* **Date:** *3/25/2016*
Project No: *SCI14100CSD* **Designer:** *H. McCutcheon*
Case: *Case 11*
Design Method: *Rankine-w/Batter (modified soil interface)*

Soil Parameters:	**ϕ deg**	**c psf**	**γ pcf**
Reinforced Fill	*34*	*0*	*110*
Retained Zone	*27*	*50*	*120*
Foundation Soil	*38*	*50*	*130*

Leveling Pad: ***Crushed Stone***

Modular Concrete Unit: *CompacIII*
Depth: *1.00 ft* **In-Place Wt:** *120 pcf*

Geometry

Internal Stability
(Broken geometry)
Height: 13.00 ft
BackSlope:
Angle: 26.6 deg
Height: 5.00 ft
Batter: 4.00deg
Surcharge:
Dead Load: 500.00 psf
Live Load: 0.00 psf
Base width: 13.0 ft

External Stability
(Horizontal geometry)
Height: 18.00 ft
Angle: 0.00 deg
Height: 0.00 ft
Batter: 4.00deg
Dead Load: 500.00 psf
Live Load:0.00 psf

Earth Pressures:

$$k_a = \frac{\sin^2(\alpha+\phi)}{\sin^2\alpha\,\sin(\alpha-\delta)\left[1+\sqrt{\frac{\sin(\phi+\delta)\sin(\phi-\beta)}{\sin(\alpha-\delta)\sin(\alpha+\beta)}}\right]^2}$$

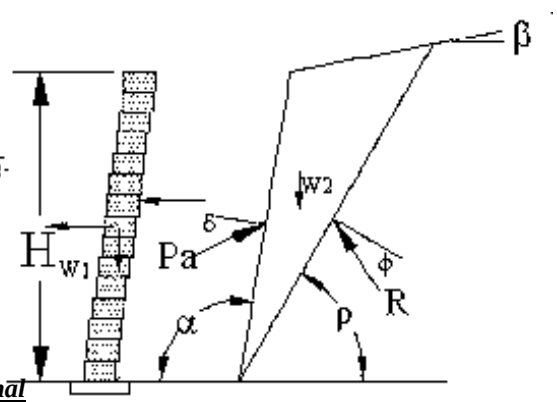

Internal		***External***	
ϕ	= 34 deg	ϕ	= 27 deg
α	= 94.00 deg	α	= 94.00 deg
β	= 26.57 deg	β	= 26.57 deg
δ	= 10.89 deg	δ	= 0.00 deg
H	= 13.00 ft		
ka	= 0.322	ka	= 0.356

Hinge Height: Hinge Ht= Not applicable

Reinforcing Parameters: *Strata-Grid Geogrids*

	Tult	RFcr	RFd	RFid	LTDS	FS	Tal	Ci	Cds
SG150	*1875*	*1.65*	*1.10*	*1.35*	*765*	*1.50*	*510*	*0.90*	*0.90*

Connection Parameters: Strata-Grid Geogrids

	Frictional 1	Break Pt	Frictional 2
SG150	*Tcl= Ntan(16.00) + 750*	*1609*	*Tcl= Ntan(0.00) +1211*

Unit Shear Data

Shear = N tan(40.00)
Inter-Unit ShearShear = N tan(34.00) + 900.00

Calculated Reactions

For the "modified" design method, the back of the mass assumed to be vertical for calculation of resisting forces.
effective sliding length = 13.00 ft

$Pa := 0.5H\cdot(\gamma\cdot H\cdot ka - 2c\cdot\sqrt{ka})$ $\quad P_q := q\cdot H\cdot ka$

$Pa_h := Pa\cdot\cos(\delta)$ $\quad Pq_h := P_q\cdot\cos(\delta)$

$Pa_v := Pa\cdot\sin(\delta)$ $\quad Pq_v := P_q\cdot\sin(\delta)$

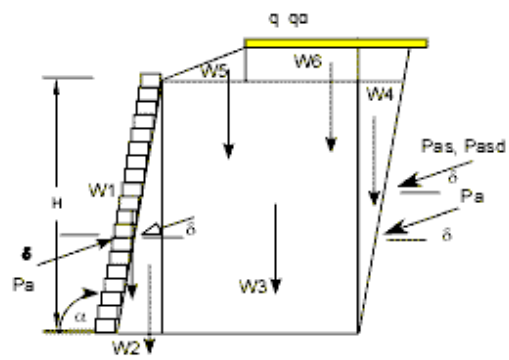

Reactions are:

Area	Force	Arm-x	Arm-y	Moment
W1	*1560.00*	*[0.955]*	*6.500*	*1489.06*
W2	*649.97*	*[1.606]*	*4.333*	*1043.87*
W3	*15860.06*	*[7.455]*	*6.500*	*118229.21*
W5	*3000.65*	*[8.576]*	*14.667*	*25732.70*
W6	*654.71*	*[12.455]*	*15.501*	*8154.13*
qd	*545.48*	*[12.455]*	*18.001*	*6793.64*
Pa_h	*6554.00*	*13.000*	*[6.000]*	*-39326.39*
Pqd_h	*3034.08*	*13.000*	*[9.001]*	*-27308.35*
Sum V =	*22270.87*		*Sum Mr =*	*161442.61*
Sum H =	*9588.08*		*Sum Mo =*	*-66634.74*

Calculate Sliding at Base

For Sliding, Vertical Force = W1+W2+W3+W4+W5+W6+qd	= 22271
The resisting force within the rein. mass , Rf_1	= N tan(34)
	= 15022
The resisting force at the foundation, Rf_2	= N tan(38) + (13.00 x 50.00)
	= 18050
The driving forces, Df, are the sum of the external earth pressures:	
Pa_h + Pql_h + Pqd_h	= 9588
the Factor of Safety for Sliding is Rf_1/Df	= 1.57

Calculate Overturning:

Overturning moment: Mo = Sum Mo	= -66635
Resisting moment: Mr = Sum Mr	= 161443
Factor of Safety of Overturning: Mr/Mo	= 2.42

Calculate eccentricity at base: with Surcharge / without Surcharge
Sum Moments = 94808 / 94808
Sum Vertical = 22271/22271
Base Length = 13.00
e = 2.243 / 2.243

Calculate Ultimate Bearing based on shear:
where:

Nq = 48.93
Nc = 61.35
Ng = 78.02 (ref. Vesic(1973, 1975) eqns)
Qult = 65331 psf

Equivalent footing width, B' = L -2e = 8.51 / 8.51
Bearing pressure = sumV/B' = 2616 psf / 2616 psf [bearing is greatest without liveload]
Factor of Safety for bearing = Qult/bearing= 24.98

Calculate Tensions in Reinforcing:
The tensions in the reinforcing layer, and the assumed load at the connection,
is the vertical area supported by each respective layer, Sv.Column [7] is '2c sqrt(ka)'.

Table of Results ppf

[1] Layer	[2] Depth zi	[3] h1	[4] ka/rho	[5] Pa	[6] (Pas+Pasd)	[7] c	[8] (5+6)cos(d)-7	[9] Ti	[10] Tcl	[11] Tsc
10	1.00	1.00	0.357/50	79	0	0	77	77	523	N/A
9	3.00	3.00	0.357/50	236	0	0	231	231	569	N/A
8	5.00	4.83	0.301/42	266	27	0	289	289	615	N/A
7	6.33	6.33	0.316/44	293	33	0	320	320	645	N/A
6	7.67	7.67	0.327/46	368	39	0	399	399	676	N/A
5	9.00	9.00	0.334/48	441	42	0	474	474	706	N/A
4	10.33	10.17	0.325/48	364	39	0	396	396	737	N/A
3	11.00	11.00	0.333/50	268	25	0	288	288	752	N/A
2	11.67	11.67	0.329/50	281	27	0	303	303	768	N/A
1	12.33	12.50	0.324/50	446	45	0	482	482	783	N/A

Calculate sliding on the reinforcing:

The shear value is the lessor of base-shear or inter-unit shear.

[1] Layer	[2] Depth zi	[3] N	[4] Li	[5] Cds	[6] τ	[7] RF	[8] ka	[9] Pa	[10] Pas+Pasd	[11] DF	[12] FS
10	*1.00*	*5769*	*12.00*	*0.90*	*981*	*4483*	*0.356*	*769*	*1068*	*1658*	*2.70*
9	*3.00*	*8336*	*12.00*	*0.90*	*1143*	*6203*	*0.356*	*1367*	*1424*	*2553*	*2.43*
8	*5.00*	*10873*	*12.00*	*0.90*	*1305*	*7905*	*0.356*	*2136*	*1780*	*3618*	*2.18*
7	*6.33*	*12546*	*12.00*	*0.90*	*1413*	*9029*	*0.356*	*2744*	*2017*	*4423*	*2.04*
6	*7.67*	*14207*	*12.00*	*0.90*	*1521*	*10145*	*0.356*	*3427*	*2255*	*5304*	*1.91*
5	*9.00*	*15853*	*12.00*	*0.90*	*1628*	*11252*	*0.356*	*4187*	*2492*	*6261*	*1.80*
4	*10.33*	*17486*	*12.00*	*0.90*	*1736*	*12351*	*0.356*	*5022*	*2729*	*7294*	*1.69*
3	*11.00*	*18297*	*12.00*	*0.90*	*1790*	*12898*	*0.356*	*5469*	*2848*	*7839*	*1.65*
2	*11.67*	*19105*	*12.00*	*0.90*	*1844*	*13442*	*0.356*	*5934*	*2967*	*8403*	*1.60*
1	*12.33*	*19910*	*12.00*	*0.90*	*1898*	*13985*	*0.356*	*6418*	*3085*	*8986*	*1.56*

Calculate pullout of each layer

The FoS (R*/S*) of pullout is calculated as the individual
layer pullout (Rf) divided by the tension (Df) in that layer.
The angle of the failure plane is: 28.00 degrees from vertical.

[1] Layer	[2] Depth zi	[3] Le	[4] SumV	[5] Ci	[6] POi	[7] Ti	[8] FS_PO
10	*1.00*	*6.46*	*5678*	*0.90*	*6894*	*77*	*89.36*
9	*3.00*	*7.38*	*7629*	*0.90*	*9262*	*231*	*40.02*
8	*5.00*	*8.31*	*9918*	*0.90*	*12042*	*289*	*41.73*
7	*6.33*	*8.92*	*11632*	*0.90*	*14123*	*320*	*44.08*
6	*7.67*	*9.54*	*13497*	*0.90*	*16387*	*399*	*41.07*
5	*9.00*	*10.15*	*15512*	*0.90*	*18834*	*474*	*39.75*
4	*10.33*	*10.77*	*17678*	*0.90*	*21463*	*396*	*54.21*
3	*11.00*	*11.08*	*18817*	*0.90*	*22846*	*288*	*79.41*
2	*11.67*	*11.38*	*19994*	*0.90*	*24275*	*303*	*80.12*
1	*12.33*	*11.69*	*21209*	*0.90*	*25750*	*482*	*53.42*

Check Shear & Bending at each layer

Bending on the top layer is the FOS of overturning of the Units
(Most surcharge loads need to be moved back from the face.)

[1] Layer	*[2] Depth zi*	*[3] Si*	*[4] DM*	*[5] Pv*	*[6] RM*	*[7] FS_b*	*[8] DS*	*[9] RS*	*FS_Sh*
10	*1.00*	*1.00*	*6*	*120*	*64*	*9.99*	*19*	*981*	*50.86*
9	*3.00*	*2.00*	*44*	*240*	*212*	*4.77*	*95*	*1143*	*12.08*
8	*5.00*	*2.00*	*80*	*480*	*355*	*4.44*	*166*	*1305*	*7.86*
7	*6.33*	*1.33*	*49*	*680*	*465*	*9.50*	*150*	*1413*	*9.40*
6	*7.67*	*1.33*	*62*	*840*	*565*	*9.09*	*190*	*1521*	*8.02*
5	*9.00*	*1.33*	*75*	*1000*	*664*	*8.89*	*227*	*1628*	*7.18*
4	*10.33*	*1.33*	*86*	*1160*	*763*	*8.87*	*261*	*1736*	*6.65*
3	*11.00*	*0.67*	*23*	*1280*	*844*	*36.06*	*141*	*1790*	*12.68*
2	*11.67*	*0.67*	*25*	*1360*	*896*	*36.10*	*150*	*1844*	*12.33*
1	*12.33*	*0.67*	*26*	*1440*	*947*	*36.35*	*157*	*1898*	*12.09*

RETAINING WALL DESIGN

KeyWall_2012 Version 3.7.2 Build 16

Project: *Villas at Winter Park*
Project No: *SCI14100CSD*
Case: *Case 12*
Design Method: *Rankine-w/Batter (modified soil interface)*

Date: *3/25/2016*
Designer: *H. McCutcheon*

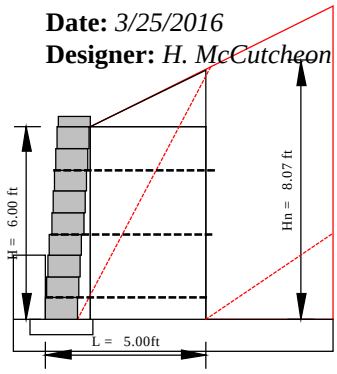

Design Parameters

Soil Parameters:

	ϕ deg	c psf	γ pcf
Reinforced Fill	*34*	*0*	*110*
Retained Zone	*27*	*50*	*120*
Foundation Soil	*38*	*50*	*130*

Reinforced Fill Type: *2.5" minus Crushed Stone or Gravel*
Unit Fill: *Crushed Stone, 1 inch minus*

Minimum Design Factors of Safety

sliding:	1.50	pullout:	1.50	uncertainties:	1.50
overturning:	1.50	shear:	1.50	connection:	1.50
bearing:	1.50	bending:	1.50		

Design Preferences

Reinforcing Parameters: *Strata-Grid Geogrids*

	Tult	RFcr	RFd	RFid	LTDS	FS	Tal	Ci	Cds
SG150	*1875*	*1.65*	*1.10*	*1.35*	*765*	*1.50*	*510*	*0.90*	*0.90*

Analysis: ***Case: Case 12***
4' Upper Wall at Magdalene Street Extension Residence

Unit Type:	*CompacIII / 120.00 pcf*	*Wall Batter: 4.00 deg (Hinge Ht N/A)*
Leveling Pad:	*Crushed Stone*	
Wall Ht:	*6.00 ft*	*embedment: 2.00 ft*
BackSlope:	*26.57 deg. slope,*	*50.00 ft long*
Surcharge:	*LL: 0 psf uniform surcharge*	*DL: 0 psf uniform surcharge*
	Load Width: 0.00 ft	*Load Width: 0.00 ft*

Results:

	Sliding	Overturning	Bearing	Shear	Bending
Factors of Safety:	*1.51*	*2.73*	*31.76*	*7.85*	*4.62*

Calculated Bearing Pressure: *1162 / 1162 psf*
Eccentricity at base: 0.42 ft
Reinforcing: (ft & lbs/ft)

Layer	Height	Length	Calc. Tension	Reinf. Type	Allow Ten Tal	Pk Conn Tcl	Pullout FS
3	*4.67*	*5.0*	*96*	*SG150*	*510 ok*	*531 ok*	*7.64 ok*
2	*2.67*	*5.0*	*234*	*SG150*	*510 ok*	*576 ok*	*7.32 ok*
1	*0.67*	*5.0*	*302*	*SG150*	*510 ok*	*622 ok*	*>10 ok*

Reinforcing Quantities (no waste included):
SG150 1.67 sy/ft

NOTE: THESE CALCULATIONS ARE FOR PRELIMINARY DESIGN ONLY AND SHOULD NOT BE USED FOR CONSTRUCTION WITHOUT REVIEW BY A QUALIFIED ENGINEER

DETAILED CALCULATIONS

Project: *Villas at Winter Park* **Date:** *3/25/2016*
Project No: *SCI14100CSD* **Designer:** *H. McCutcheon*
Case: *Case 12*
Design Method: *Rankine-w/Batter (modified soil interface)*

Soil Parameters:	**ϕ deg**	**c psf**	**γ pcf**
Reinforced Fill	*34*	*0*	*110*
Retained Zone	*27*	*50*	*120*
Foundation Soil	*38*	*50*	*130*

Leveling Pad: ***Crushed Stone***

Modular Concrete Unit: *CompacIII*
Depth: *1.00 ft* **In-Place Wt:** *120 pcf*

Geometry

Internal Stability
(Sloping geometry)
Height: 6.00 ft
BackSlope:
Angle: 26.6 deg
Height: 25.01 ft
Batter: 4.00deg
Surcharge:
Dead Load: 0.00 psf
Live Load: 0 psf
Base width: 5.0 ft

External Stability
(Sloping geometry)
Height: 8.07 ft
Angle: 26.6 deg
Height: 22.93 ft
Batter: 4.00deg
Dead Load: 0.00 psf
Live Load:0 psf

Earth Pressures:

$$k_a = \frac{\sin^2(\alpha+\phi)}{\sin^2\alpha\,\sin(\alpha-\delta)\left[1+\sqrt{\frac{\sin(\phi+\delta)\sin(\phi-\beta)}{\sin(\alpha-\delta)\sin(\alpha+\beta)}}\right]^2}$$

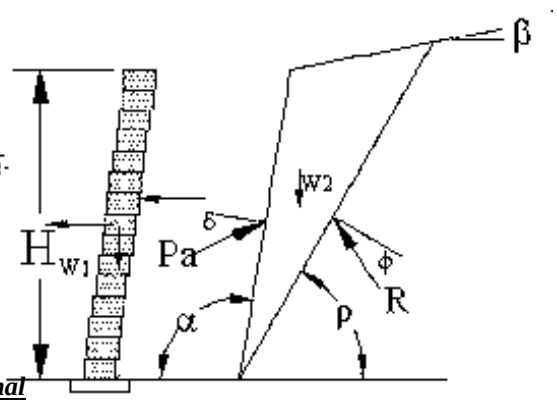

Internal		***External***	
ϕ	= 34 deg	ϕ	= 27 deg
α	= 94.00 deg	α	= 94.00 deg
β	= 26.57 deg	β	= 26.57 deg
δ	= 26.57 deg	δ	= 26.57 deg
H	= 6.00 ft		
ka	= 0.357	ka	= 0.706

Hinge Height: Hinge Ht= Not applicable

Reinforcing Parameters: *Strata-Grid Geogrids*

	Tult	RFcr	RFd	RFid	LTDS	FS	Tal	Ci	Cds
SG150	*1875*	*1.65*	*1.10*	*1.35*	*765*	*1.50*	*510*	*0.90*	*0.90*

Connection Parameters: Strata-Grid Geogrids

	Frictional 1	Break Pt	Frictional 2
SG150	*Tcl= Ntan(16.00) + 750*	*1609*	*Tcl= Ntan(0.00) +1211*

Unit Shear Data

Shear = N tan(40.00)
Inter-Unit ShearShear = N tan(34.00) + 900.00

Calculated Reactions

For the "modified" design method, the back of the mass assumed to be vertical for calculation of resisting forces.
effective sliding length = 5.00 ft

$Pa := 0.5H\cdot(\gamma\cdot H\cdot ka - 2c\cdot\sqrt{ka})$ $\quad P_q := q\cdot H\cdot ka$

$Pa_h := Pa\cdot\cos(\delta)$ $\quad Pq_h := P_q\cdot\cos(\delta)$

$Pa_v := Pa\cdot\sin(\delta)$ $\quad Pq_v := P_q\cdot\sin(\delta)$

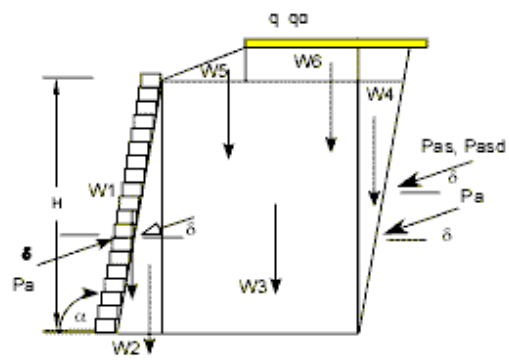

Reactions are:

Area	Force	Arm-x	Arm-y	Moment
W1	*720.00*	*[0.710]*	*3.000*	*511.04*
W2	*138.46*	*[1.280]*	*2.000*	*177.18*
W3	*2363.09*	*[3.210]*	*3.000*	*7585.00*
W5	*384.67*	*[3.807]*	*6.597*	*1464.25*
Pa_h	*2166.83*	*5.000*	*[2.691]*	*-5830.89*
Pa_v	*1235.39*	*[5.000]*	*2.691*	*6176.93*
Sum V =	*4841.60*		*Sum Mr =*	*15914.41*
Sum H =	*2166.83*		*Sum Mo =*	*-5830.89*

Calculate Sliding at Base

For Sliding, Vertical Force = W1+W2+W3+W4+W5+W6+qd	= 4842
The resisting force within the rein. mass , Rf_1	= N tan(34)
	= 3266
The resisting force at the foundation, Rf_2	= N tan(38) + (5.00 x 50.00)
	= 4033
The driving forces, Df, are the sum of the external earth pressures:	
Pa_h + Pql_h + Pqd_h	= 2167
the Factor of Safety for Sliding is Rf_1/Df	= 1.51

Calculate Overturning:

Overturning moment: Mo = Sum Mo	= -5831
Resisting moment: Mr = Sum Mr	= 15914
Factor of Safety of Overturning: Mr/Mo	= 2.73

Calculate eccentricity at base: with Surcharge / without Surcharge
Sum Moments = 10084 / 10084
Sum Vertical = 4842/4842
Base Length = 5.00
e = 0.417 / 0.417

Calculate Ultimate Bearing based on shear:
where:

Nq = 48.93
Nc = 61.35
Ng = 78.02 (ref. Vesic(1973, 1975) eqns)
Qult = 36915 psf

Equivalent footing width, B' = L -2e = 4.17 / 4.17
Bearing pressure = sumV/B' = 1162 psf / 1162 psf [bearing is greatest without liveload]
Factor of Safety for bearing = Qult/bearing= 31.76

Calculate Tensions in Reinforcing:
The tensions in the reinforcing layer, and the assumed load at the connection,
is the vertical area supported by each respective layer, Sv.Column [7] is '2c sqrt(ka)'.

Table of Results ppf

[1] Layer	[2] Depth zi	[3] h1	[4] ka/rho	[5] Pa	[6] (Pas+Pasd)	[7] c	[8] (5+6)cos(d)-7	[9] Ti	[10] Tcl	[11] Tsc
3	1.33	1.17	0.357/48	107	0	0	96	96	531	N/A
2	3.33	3.33	0.357/48	262	0	0	234	234	576	N/A
1	5.33	5.17	0.357/48	338	0	0	302	302	622	N/A

Calculate sliding on the reinforcing:

The shear value is the lessor of base-shear or inter-unit shear.

[1] Layer	[2] Depth zi	[3] N	[4] Li	[5] Cds	[6] τ	[7] RF	[8] ka	[9] Pa	[10] Pas+Pasd	[11] DF	[12] FS
3	*1.33*	*1228*	*4.00*	*0.90*	*1008*	*1753*	*0.733*	*510*	*0*	*326*	*5.38*
2	*3.33*	*2403*	*4.00*	*0.90*	*1170*	*2629*	*0.733*	*1285*	*0*	*942*	*2.79*
1	*5.33*	*3677*	*4.00*	*0.90*	*1332*	*3564*	*0.713*	*2348*	*0*	*1820*	*1.96*

Calculate pullout of each layer

The FoS (R*/S*) of pullout is calculated as the individual
layer pullout (Rf) divided by the tension (Df) in that layer.
The angle of the failure plane is: 28.00 degrees from vertical.

[1]	[2]	[3]	[4]	[5]	[6]	[7]	[8]
Layer	Depth zi	Le	SumV	Ci	POi	Ti	FS_PO
3	*1.33*	*1.85*	*601*	*0.90*	*730*	*96*	*7.64*
2	*3.33*	*2.77*	*1411*	*0.90*	*1713*	*234*	*7.32*
1	*5.33*	*3.69*	*2561*	*0.90*	*3109*	*302*	*10.29*

Check Shear & Bending at each layer

Bending on the top layer is the FOS of overturning of the Units
(Most surcharge loads need to be moved back from the face.)

[1]	*[2]*	*[3]*	*[4]*	*[5]*	*[6]*	*[7]*	*[8]*	*[9]*	
Layer	*Depth zi*	*Si*	*DM*	*Pv*	*RM*	*FS_b*	*DS*	*RS*	*FS_Sh*
3	*1.33*	*1.33*	*14*	*160*	*87*	*6.31*	*31*	*1008*	*32.31*
2	*3.33*	*2.00*	*47*	*280*	*235*	*5.03*	*99*	*1170*	*11.76*
1	*5.33*	*2.00*	*82*	*520*	*379*	*4.62*	*170*	*1332*	*7.85*

RETAINING WALL DESIGN

KeyWall_2012 Version 3.7.2 Build 16

Project: *Villas at Winter Park*
Project No: *SCI14100CSD*
Case: *Case 13*
Design Method: *Rankine-w/Batter (modified soil interface)*

Date: *3/25/2016*
Designer: *H. McCutcheon*

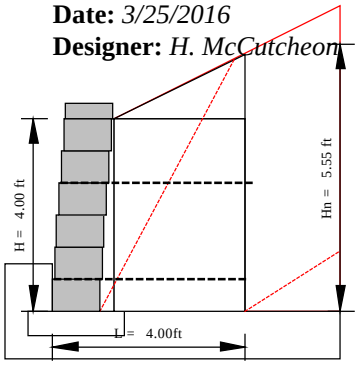

Design Parameters

Soil Parameters:

	ϕ deg	c psf	γ pcf
Reinforced Fill	*34*	*0*	*110*
Retained Zone	*27*	*50*	*120*
Foundation Soil	*38*	*50*	*130*

Reinforced Fill Type: *2.5" minus Crushed Stone or Gravel*
Unit Fill: *Crushed Stone, 1 inch minus*

Minimum Design Factors of Safety

sliding:	1.50	pullout:	1.50	uncertainties:	1.50
overturning:	1.50	shear:	1.50	connection:	1.50
bearing:	1.50	bending:	1.50		

Design Preferences

Reinforcing Parameters: *Strata-Grid Geogrids*

	Tult	RFcr	RFd	RFid	LTDS	FS	Tal	Ci	Cds
SG150	*1875*	*1.65*	*1.10*	*1.35*	*765*	*1.50*	*510*	*0.90*	*0.90*

Analysis: ***Case: Case 13***
3' Upper Wall at Magdalene Street Extension Residence

Unit Type:	*CompacIII / 120.00 pcf*	*Wall Batter: 4.00 deg (Hinge Ht N/A)*
Leveling Pad:	*Crushed Stone*	
Wall Ht:	*4.00 ft*	*embedment: 1.00 ft*
BackSlope:	*26.57 deg. slope,*	*50.00 ft long*
Surcharge:	*LL: 0 psf uniform surcharge*	*DL: 0 psf uniform surcharge*
	Load Width: 0.00 ft	*Load Width: 0.00 ft*

Results:

	Sliding	Overturning	Bearing	Shear	Bending
Factors of Safety:	*1.73*	*3.59*	*41.38*	*11.76*	*5.03*

Calculated Bearing Pressure: *686 / 686 psf*
Eccentricity at base: 0.13 ft
Reinforcing: (ft & lbs/ft)

Layer	Height	Length	Calc. Tension	Reinf. Type	Allow Ten Tal	Pk Conn Tcl	Pullout FS
2	*2.67*	*4.0*	*96*	*SG150*	*510 ok*	*531 ok*	*6.02 ok*
1	*0.67*	*4.0*	*185*	*SG150*	*510 ok*	*576 ok*	*7.98 ok*

Reinforcing Quantities (no waste included):
SG150 0.89 sy/ft

NOTE: THESE CALCULATIONS ARE FOR PRELIMINARY DESIGN ONLY AND SHOULD NOT BE USED FOR CONSTRUCTION WITHOUT REVIEW BY A QUALIFIED ENGINEER

DETAILED CALCULATIONS

Project: *Villas at Winter Park* **Date:** *3/25/2016*
Project No: *SCI14100CSD* **Designer:** *H. McCutcheon*
Case: *Case 13*
Design Method: *Rankine-w/Batter (modified soil interface)*

Soil Parameters:	**ϕ deg**	**c psf**	**γ pcf**
Reinforced Fill	*34*	*0*	*110*
Retained Zone	*27*	*50*	*120*
Foundation Soil	*38*	*50*	*130*

Leveling Pad: ***Crushed Stone***

Modular Concrete Unit: *CompacIII*
Depth: *1.00 ft* **In-Place Wt:** *120 pcf*

Geometry

Internal Stability
(Sloping geometry)
Height: 4.00 ft
BackSlope:
Angle: 26.6 deg
Height: 25.01 ft
Batter: 4.00deg
Surcharge:
Dead Load: 0.00 psf
Live Load: 0 psf
Base width: 4.0 ft

External Stability
(Sloping geometry)
Height: 5.55 ft
Angle: 26.6 deg
Height: 23.45 ft
Batter: 4.00deg
Dead Load: 0.00 psf
Live Load:0 psf

Earth Pressures:

$$k_a = \frac{\sin^2(\alpha+\phi)}{\sin^2\alpha\,\sin(\alpha-\delta)\left[1+\sqrt{\frac{\sin(\phi+\delta)\sin(\phi-\beta)}{\sin(\alpha-\delta)\sin(\alpha+\beta)}}\right]^2}$$

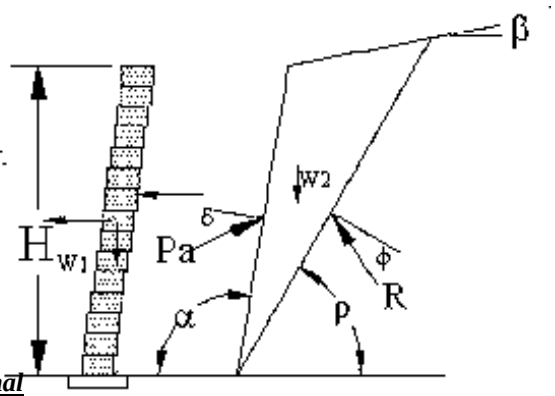

Internal		***External***	
ϕ	= 34 deg	ϕ	= 27 deg
α	= 94.00 deg	α	= 94.00 deg
β	= 26.57 deg	β	= 26.57 deg
δ	= 26.57 deg	δ	= 26.57 deg
H	= 4.00 ft		
ka	= 0.357	ka	= 0.733

Hinge Height: Hinge Ht= Not applicable

Reinforcing Parameters: *Strata-Grid Geogrids*

	Tult	RFcr	RFd	RFid	LTDS	FS	Tal	Ci	Cds
SG150	*1875*	*1.65*	*1.10*	*1.35*	*765*	*1.50*	*510*	*0.90*	*0.90*

Connection Parameters: Strata-Grid Geogrids

	Frictional 1	Break Pt	Frictional 2
SG150	*Tcl= Ntan(16.00) + 750*	*1609*	*Tcl= Ntan(0.00) +1211*

Unit Shear Data

Shear = N tan(40.00)
Inter-Unit ShearShear = N tan(34.00) + 900.00

Calculated Reactions

For the "modified" design method, the back of the mass assumed to be vertical for calculation of resisting forces.
effective sliding length = 4.00 ft

$$Pa := 0.5H\cdot\left(\gamma\cdot H\cdot ka - 2c\cdot\sqrt{ka}\right) \qquad P_q := q\cdot H\cdot ka$$

$$Pa_h := Pa\cdot\cos(\delta) \qquad Pq_h := P_q\cdot\cos(\delta)$$

$$Pa_v := Pa\cdot\sin(\delta) \qquad Pq_v := P_q\cdot\sin(\delta)$$

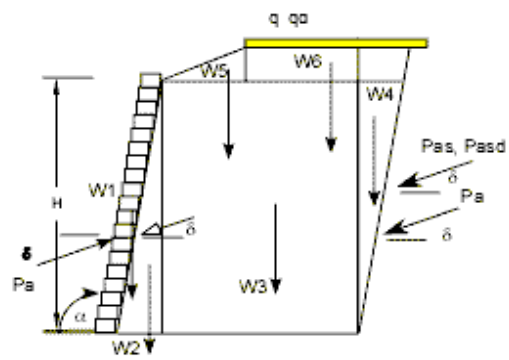

Reactions are:

Area	Force	Arm-x	Arm-y	Moment
W1	*480.00*	*[0.640]*	*2.000*	*307.13*
W2	*61.54*	*[1.186]*	*1.333*	*73.01*
W3	*1196.93*	*[2.640]*	*2.000*	*3159.72*
W5	*222.05*	*[3.093]*	*4.453*	*686.85*
Pa_h	*1000.26*	*4.000*	*[1.852]*	*-1852.05*
Pa_v	*606.56*	*[4.000]*	*1.852*	*2426.24*
Sum V =	*2567.07*		*Sum Mr =*	*6652.95*
Sum H =	*1000.26*		*Sum Mo =*	*-1852.05*

Calculate Sliding at Base

For Sliding, Vertical Force = W1+W2+W3+W4+W5+W6+qd	= 2567
The resisting force within the rein. mass , Rf_1	= N tan(34)
	= 1732
The resisting force at the foundation, Rf_2	= N tan(38) + (4.00 x 50.00)
	= 2206
The driving forces, Df, are the sum of the external earth pressures:	
Pa_h + Pql_h + Pqd_h	= 1000
the Factor of Safety for Sliding is Rf_1/Df	= 1.73

Calculate Overturning:

Overturning moment: Mo = Sum Mo	= -1852
Resisting moment: Mr = Sum Mr	= 6653
Factor of Safety of Overturning: Mr/Mo	= 3.59

Calculate eccentricity at base: with Surcharge / without Surcharge
Sum Moments = 4801 / 4801
Sum Vertical = 2567/2567
Base Length = 4.00
e = 0.130 / 0.130

Calculate Ultimate Bearing based on shear:
where:

Nq = 48.93
Nc = 61.35
Ng = 78.02 (ref. Vesic(1973, 1975) eqns)
Qult = 28398 psf

Equivalent footing width, B' = L -2e = 3.74 / 3.74
Bearing pressure = sumV/B' = 686 psf / 686 psf [bearing is greatest without liveload]
Factor of Safety for bearing = Qult/bearing= 41.38

Calculate Tensions in Reinforcing:
The tensions in the reinforcing layer, and the assumed load at the connection,
is the vertical area supported by each respective layer, Sv.Column [7] is '2c sqrt(ka)'.

Table of Results ppf

[1]	[2]	[3]	[4]	[5]	[6]	[7]	[8]	[9]	[10]	[11]
Layer	Depth zi	h1	ka/rho	Pa	(Pas+Pasd)	c	(5+6)cos(d)-7	Ti	Tcl	Tsc
2	1.33	1.17	0.357/48	107	0	0	96	96	531	N/A
1	3.33	3.17	0.357/48	207	0	0	185	185	576	N/A

Calculate sliding on the reinforcing:

The shear value is the lessor of base-shear or inter-unit shear.

[1]	[2]	[3]	[4]	[5]	[6]	[7]	[8]	[9]	[10]	[11]	[12]
Layer	Depth zi	N	Li	Cds	τ	RF	ka	Pa	Pas+Pasd	DF	FS
2	*1.33*	*834*	*3.00*	*0.90*	*1008*	*1514*	*0.733*	*367*	*0*	*217*	*6.97*
1	*3.33*	*1753*	*3.00*	*0.90*	*1170*	*2234*	*0.733*	*1050*	*0*	*752*	*2.97*

Calculate pullout of each layer

The FoS (R*/S*) of pullout is calculated as the individual
layer pullout (Rf) divided by the tension (Df) in that layer.
The angle of the failure plane is: 28.00 degrees from vertical.

[1]	[2]	[3]	[4]	[5]	[6]	[7]	[8]
Layer	Depth zi	Le	SumV	Ci	POi	Ti	FS_PO
2	*1.33*	*1.77*	*474*	*0.90*	*576*	*96*	*6.02*
1	*3.33*	*2.69*	*1217*	*0.90*	*1477*	*185*	*7.98*

Check Shear & Bending at each layer

Bending on the top layer is the FOS of overturning of the Units
(Most surcharge loads need to be moved back from the face.)

[1]	*[2]*	*[3]*	*[4]*	*[5]*	*[6]*	*[7]*	*[8]*	*[9]*	
Layer	*Depth zi*	*Si*	*DM*	*Pv*	*RM*	*FS_b*	*DS*	*RS*	*FS_Sh*
2	*1.33*	*1.33*	*14*	*160*	*87*	*6.31*	*31*	*1008*	*32.31*
1	*3.33*	*2.00*	*47*	*280*	*235*	*5.03*	*99*	*1170*	*11.76*

RETAINING WALL DESIGN

KeyWall_2012 Version 3.7.2 Build 16

Project: *Villas at Winter Park*
Project No: *SCI14100CSD*
Case: *Case 14*
Design Method: *Rankine-w/Batter (modified soil interface)*

Date: *3/25/2016*
Designer: *H. McCutcheon*

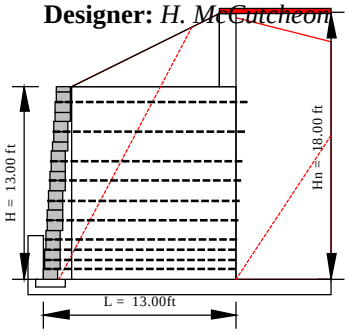

Design Parameters

Soil Parameters:

	ϕ deg	c psf	γ pcf
Reinforced Fill	*34*	*0*	*110*
Retained Zone	*27*	*50*	*120*
Foundation Soil	*38*	*50*	*130*

Reinforced Fill Type: *2.5" minus Crushed Stone or Gravel*
Unit Fill: *Crushed Stone, 1 inch minus*

Minimum Design Factors of Safety

sliding:	1.50	pullout:	1.50	uncertainties:	1.50
overturning:	1.50	shear:	1.50	connection:	1.50
bearing:	1.50	bending:	1.50		

Design Preferences

Reinforcing Parameters: *Strata-Grid Geogrids*

	Tult	RFcr	RFd	RFid	LTDS	FS	Tal	Ci	Cds
SG150	*1875*	*1.65*	*1.10*	*1.35*	*765*	*1.50*	*510*	*0.90*	*0.90*

Analysis: ***Case: Case 14***
10' Lower wall at Magdalene Street Extension Residence

Unit Type:	*CompacIII / 120.00 pcf*	*Wall Batter: 4.00 deg (Hinge Ht N/A)*
Leveling Pad:	*Crushed Stone*	
Wall Ht:	*13.00 ft*	*embedment: 3.00 ft*
BackSlope:	*26.57 deg. slope,*	*10.00 ft long*
Surcharge:	*LL: 0 psf uniform surcharge*	*DL: 500 psf uniform surcharge*
	Load Width: 0.00 ft	*Load Width: 50.00 ft*

Results:	***Sliding***	***Overturning***	***Bearing***	***Shear***	***Bending***
Factors of Safety:	*1.56*	*2.42*	*24.98*	*6.65*	*4.44*

Calculated Bearing Pressure: *2616 / 2616 psf*
Eccentricity at base: 2.24 ft
Reinforcing: (ft & lbs/ft)

Layer	Height	Length	Calc. Tension	Reinf. Type	Allow Ten Tal	Pk Conn Tcl	Pullout FS
10	*12.00*	*13.0*	*77*	*SG150*	*510 ok*	*523 ok*	*>10 ok*
9	*10.00*	*13.0*	*231*	*SG150*	*510 ok*	*569 ok*	*>10 ok*
8	*8.00*	*13.0*	*289*	*SG150*	*510 ok*	*615 ok*	*>10 ok*
7	*6.67*	*13.0*	*320*	*SG150*	*510 ok*	*645 ok*	*>10 ok*
6	*5.33*	*13.0*	*399*	*SG150*	*510 ok*	*676 ok*	*>10 ok*
5	*4.00*	*13.0*	*474*	*SG150*	*510 ok*	*706 ok*	*>10 ok*
4	*2.67*	*13.0*	*396*	*SG150*	*510 ok*	*737 ok*	*>10 ok*
3	*2.00*	*13.0*	*288*	*SG150*	*510 ok*	*752 ok*	*>10 ok*
2	*1.33*	*13.0*	*303*	*SG150*	*510 ok*	*768 ok*	*>10 ok*
1	*0.67*	*13.0*	*482*	*SG150*	*510 ok*	*783 ok*	*>10 ok*

Reinforcing Quantities (no waste included):
SG150 14.44 sy/ft

NOTE: THESE CALCULATIONS ARE FOR PRELIMINARY DESIGN ONLY AND SHOULD NOT BE USED FOR CONSTRUCTION WITHOUT REVIEW BY A QUALIFIED ENGINEER

DETAILED CALCULATIONS

Project: *Villas at Winter Park* **Date:** *3/25/2016*
Project No: *SCI14100CSD* **Designer:** *H. McCutcheon*
Case: *Case 14*
Design Method: *Rankine-w/Batter (modified soil interface)*

Soil Parameters:	**ϕ deg**	**c psf**	**γ pcf**
Reinforced Fill	*34*	*0*	*110*
Retained Zone	*27*	*50*	*120*
Foundation Soil	*38*	*50*	*130*

Leveling Pad: ***Crushed Stone***

Modular Concrete Unit: *CompacIII*
Depth: *1.00 ft* **In-Place Wt:** *120 pcf*

Geometry

Internal Stability
(Broken geometry)
Height: 13.00 ft
BackSlope:
Angle: 26.6 deg
Height: 5.00 ft
Batter: 4.00deg
Surcharge:
Dead Load: 500.00 psf
Live Load: 0.00 psf
Base width: 13.0 ft

External Stability
(Horizontal geometry)
Height: 18.00 ft
Angle: 0.00 deg
Height: 0.00 ft
Batter: 4.00deg
Dead Load: 500.00 psf
Live Load:0.00 psf

Earth Pressures:

$$k_a = \frac{\sin^2(\alpha+\phi)}{\sin^2\alpha\,\sin(\alpha-\delta)\left[1+\sqrt{\frac{\sin(\phi+\delta)\sin(\phi-\beta)}{\sin(\alpha-\delta)\sin(\alpha+\beta)}}\right]^2}$$

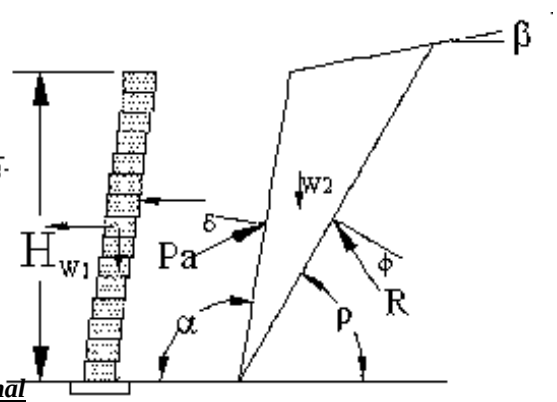

Internal		***External***	
ϕ	= 34 deg	ϕ	= 27 deg
α	= 94.00 deg	α	= 94.00 deg
β	= 26.57 deg	β	= 26.57 deg
δ	= 10.89 deg	δ	= 0.00 deg
H	= 13.00 ft		
ka	= 0.322	ka	= 0.356

Hinge Height: Hinge Ht= Not applicable

Reinforcing Parameters: *Strata-Grid Geogrids*

	Tult	RFcr	RFd	RFid	LTDS	FS	Tal	Ci	Cds
SG150	*1875*	*1.65*	*1.10*	*1.35*	*765*	*1.50*	*510*	*0.90*	*0.90*

Connection Parameters: Strata-Grid Geogrids

	Frictional 1	Break Pt	Frictional 2
SG150	*Tcl= Ntan(16.00) + 750*	*1609*	*Tcl= Ntan(0.00) +1211*

Unit Shear Data

Shear = N tan(40.00)
Inter-Unit ShearShear = N tan(34.00) + 900.00

Calculated Reactions

For the "modified" design method, the back of the mass assumed to be vertical for calculation of resisting forces.
effective sliding length = 13.00 ft

$Pa := 0.5H\cdot(\gamma\cdot H\cdot ka - 2c\cdot\sqrt{ka})$ $\quad P_q := q\cdot H\cdot ka$

$Pa_h := Pa\cdot\cos(\delta)$ $\quad Pq_h := P_q\cdot\cos(\delta)$

$Pa_v := Pa\cdot\sin(\delta)$ $\quad Pq_v := P_q\cdot\sin(\delta)$

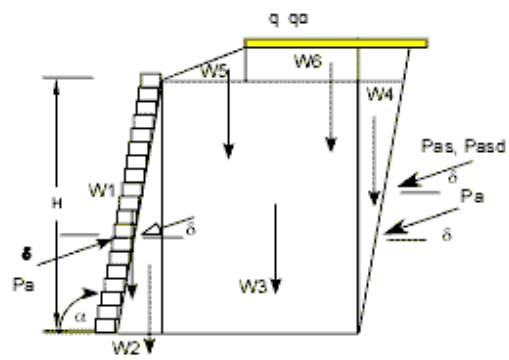

Reactions are:

Area	Force	Arm-x	Arm-y	Moment
W1	*1560.00*	*[0.955]*	*6.500*	*1489.06*
W2	*649.97*	*[1.606]*	*4.333*	*1043.87*
W3	*15860.06*	*[7.455]*	*6.500*	*118229.21*
W5	*3000.65*	*[8.576]*	*14.667*	*25732.70*
W6	*654.71*	*[12.455]*	*15.501*	*8154.13*
qd	*545.48*	*[12.455]*	*18.001*	*6793.64*
Pa_h	*6554.00*	*13.000*	*[6.000]*	*-39326.39*
Pqd_h	*3034.08*	*13.000*	*[9.001]*	*-27308.35*
Sum V =	*22270.87*		*Sum Mr =*	*161442.61*
Sum H =	*9588.08*		*Sum Mo =*	*-66634.74*

Calculate Sliding at Base

For Sliding, Vertical Force = W1+W2+W3+W4+W5+W6+qd	= 22271
The resisting force within the rein. mass , Rf_1	= N tan(34)
	= 15022
The resisting force at the foundation, Rf_2	= N tan(38) + (13.00 x 50.00)
	= 18050
The driving forces, Df, are the sum of the external earth pressures:	
Pa_h + Pql_h + Pqd_h	= 9588
the Factor of Safety for Sliding is Rf_1/Df	= 1.57

Calculate Overturning:

Overturning moment: Mo = Sum Mo	= -66635
Resisting moment: Mr = Sum Mr	= 161443
Factor of Safety of Overturning: Mr/Mo	= 2.42

Calculate eccentricity at base: with Surcharge / without Surcharge
Sum Moments = 94808 / 94808
Sum Vertical = 22271/22271
Base Length = 13.00
e = 2.243 / 2.243

Calculate Ultimate Bearing based on shear:
where:

Nq = 48.93
Nc = 61.35
Ng = 78.02 (ref. Vesic(1973, 1975) eqns)
Qult = 65331 psf

Equivalent footing width, B' = L -2e = 8.51 / 8.51
Bearing pressure = sumV/B' = 2616 psf / 2616 psf [bearing is greatest without liveload]
Factor of Safety for bearing = Qult/bearing= 24.98

Calculate Tensions in Reinforcing:
The tensions in the reinforcing layer, and the assumed load at the connection,
is the vertical area supported by each respective layer, Sv.Column [7] is '2c sqrt(ka)'.

Table of Results ppf

[1] Layer	[2] Depth zi	[3] h1	[4] ka/rho	[5] Pa	[6] (Pas+Pasd)	[7] c	[8] (5+6)cos(d)-7	[9] Ti	[10] Tcl	[11] Tsc
10	1.00	1.00	0.357/50	79	0	0	77	77	523	N/A
9	3.00	3.00	0.357/50	236	0	0	231	231	569	N/A
8	5.00	4.83	0.301/42	266	27	0	289	289	615	N/A
7	6.33	6.33	0.316/44	293	33	0	320	320	645	N/A
6	7.67	7.67	0.327/46	368	39	0	399	399	676	N/A
5	9.00	9.00	0.334/48	441	42	0	474	474	706	N/A
4	10.33	10.17	0.325/48	364	39	0	396	396	737	N/A
3	11.00	11.00	0.333/50	268	25	0	288	288	752	N/A
2	11.67	11.67	0.329/50	281	27	0	303	303	768	N/A
1	12.33	12.50	0.324/50	446	45	0	482	482	783	N/A

Calculate sliding on the reinforcing:

The shear value is the lessor of base-shear or inter-unit shear.

[1] Layer	[2] Depth zi	[3] N	[4] Li	[5] Cds	[6] τ	[7] RF	[8] ka	[9] Pa	[10] Pas+Pasd	[11] DF	[12] FS
10	*1.00*	*5769*	*12.00*	*0.90*	*981*	*4483*	*0.356*	*769*	*1068*	*1658*	*2.70*
9	*3.00*	*8336*	*12.00*	*0.90*	*1143*	*6203*	*0.356*	*1367*	*1424*	*2553*	*2.43*
8	*5.00*	*10873*	*12.00*	*0.90*	*1305*	*7905*	*0.356*	*2136*	*1780*	*3618*	*2.18*
7	*6.33*	*12546*	*12.00*	*0.90*	*1413*	*9029*	*0.356*	*2744*	*2017*	*4423*	*2.04*
6	*7.67*	*14207*	*12.00*	*0.90*	*1521*	*10145*	*0.356*	*3427*	*2255*	*5304*	*1.91*
5	*9.00*	*15853*	*12.00*	*0.90*	*1628*	*11252*	*0.356*	*4187*	*2492*	*6261*	*1.80*
4	*10.33*	*17486*	*12.00*	*0.90*	*1736*	*12351*	*0.356*	*5022*	*2729*	*7294*	*1.69*
3	*11.00*	*18297*	*12.00*	*0.90*	*1790*	*12898*	*0.356*	*5469*	*2848*	*7839*	*1.65*
2	*11.67*	*19105*	*12.00*	*0.90*	*1844*	*13442*	*0.356*	*5934*	*2967*	*8403*	*1.60*
1	*12.33*	*19910*	*12.00*	*0.90*	*1898*	*13985*	*0.356*	*6418*	*3085*	*8986*	*1.56*

Calculate pullout of each layer

The FoS (R*/S*) of pullout is calculated as the individual
layer pullout (Rf) divided by the tension (Df) in that layer.
The angle of the failure plane is: 28.00 degrees from vertical.

[1] Layer	[2] Depth zi	[3] Le	[4] SumV	[5] Ci	[6] POi	[7] Ti	[8] FS_PO
10	*1.00*	*6.46*	*5678*	*0.90*	*6894*	*77*	*89.36*
9	*3.00*	*7.38*	*7629*	*0.90*	*9262*	*231*	*40.02*
8	*5.00*	*8.31*	*9918*	*0.90*	*12042*	*289*	*41.73*
7	*6.33*	*8.92*	*11632*	*0.90*	*14123*	*320*	*44.08*
6	*7.67*	*9.54*	*13497*	*0.90*	*16387*	*399*	*41.07*
5	*9.00*	*10.15*	*15512*	*0.90*	*18834*	*474*	*39.75*
4	*10.33*	*10.77*	*17678*	*0.90*	*21463*	*396*	*54.21*
3	*11.00*	*11.08*	*18817*	*0.90*	*22846*	*288*	*79.41*
2	*11.67*	*11.38*	*19994*	*0.90*	*24275*	*303*	*80.12*
1	*12.33*	*11.69*	*21209*	*0.90*	*25750*	*482*	*53.42*

Check Shear & Bending at each layer

Bending on the top layer is the FOS of overturning of the Units
(Most surcharge loads need to be moved back from the face.)

[1] Layer	*[2] Depth zi*	*[3] Si*	*[4] DM*	*[5] Pv*	*[6] RM*	*[7] FS_b*	*[8] DS*	*[9] RS*	*FS_Sh*
10	*1.00*	*1.00*	*6*	*120*	*64*	*9.99*	*19*	*981*	*50.86*
9	*3.00*	*2.00*	*44*	*240*	*212*	*4.77*	*95*	*1143*	*12.08*
8	*5.00*	*2.00*	*80*	*480*	*355*	*4.44*	*166*	*1305*	*7.86*
7	*6.33*	*1.33*	*49*	*680*	*465*	*9.50*	*150*	*1413*	*9.40*
6	*7.67*	*1.33*	*62*	*840*	*565*	*9.09*	*190*	*1521*	*8.02*
5	*9.00*	*1.33*	*75*	*1000*	*664*	*8.89*	*227*	*1628*	*7.18*
4	*10.33*	*1.33*	*86*	*1160*	*763*	*8.87*	*261*	*1736*	*6.65*
3	*11.00*	*0.67*	*23*	*1280*	*844*	*36.06*	*141*	*1790*	*12.68*
2	*11.67*	*0.67*	*25*	*1360*	*896*	*36.10*	*150*	*1844*	*12.33*
1	*12.33*	*0.67*	*26*	*1440*	*947*	*36.35*	*157*	*1898*	*12.09*

RETAINING WALL DESIGN

KeyWall_2012 Version 3.7.2 Build 16

Project: *Villas at Winter Park*
Project No: *SCI14100CSD*
Case: *Case 15*
Design Method: *Rankine-w/Batter (modified soil interface)*

Date: *3/25/2016*
Designer: *H. McCutcheon*

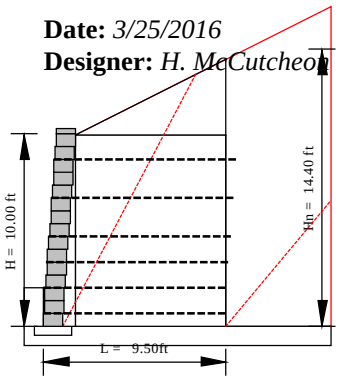

Design Parameters

Soil Parameters:

	ϕ deg	c psf	γ pcf
Reinforced Fill	*34*	*0*	*110*
Retained Zone	*27*	*50*	*120*
Foundation Soil	*38*	*50*	*130*

Reinforced Fill Type: *2.5" minus Crushed Stone or Gravel*
Unit Fill: *Crushed Stone, 1 inch minus*

Minimum Design Factors of Safety

sliding:	1.50	pullout:	1.50	uncertainties:	1.50
overturning:	1.50	shear:	1.50	connection:	1.50
bearing:	1.50	bending:	1.50		

Design Preferences

Reinforcing Parameters: *Strata-Grid Geogrids*

	Tult	RFcr	RFd	RFid	LTDS	FS	Tal	Ci	Cds
SG150	*1875*	*1.65*	*1.10*	*1.35*	*765*	*1.50*	*510*	*0.90*	*0.90*

Analysis: ***Case: Case 15***
8' Wall at Gregory Street

Unit Type:	*CompacIII / 120.00 pcf*	*Wall Batter: 4.00 deg (Hinge Ht N/A)*
Leveling Pad:	*Crushed Stone*	
Wall Ht:	*10.00 ft*	*embedment: 2.00 ft*
BackSlope:	*26.57 deg. slope,*	*15.00 ft long*
Surcharge:	*LL: 250 psf uniform surcharge*	*DL: 0 psf uniform surcharge*
	Load Width: 20.00 ft	*Load Width: 0.00 ft*

Results:

	Sliding	Overturning	Bearing	Shear	Bending
Factors of Safety:	*1.59*	*2.59*	*26.29*	*7.58*	*4.46*

Calculated Bearing Pressure: *1930 / 1930 psf*
Eccentricity at base: 1.30 ft
Reinforcing: (ft & lbs/ft)

Layer	Height	Length	Calc. Tension	Reinf. Type	Allow Ten Tal	Pk Conn Tcl	Pullout FS
6	*8.67*	*9.5*	*99*	*SG150*	*510 ok*	*531 ok*	*>10 ok*
5	*6.67*	*9.5*	*243*	*SG150*	*510 ok*	*576 ok*	*>10 ok*
4	*4.67*	*9.5*	*313*	*SG150*	*510 ok*	*622 ok*	*>10 ok*
3	*3.33*	*9.5*	*323*	*SG150*	*510 ok*	*653 ok*	*>10 ok*
2	*2.00*	*9.5*	*388*	*SG150*	*510 ok*	*684 ok*	*>10 ok*
1	*0.67*	*9.5*	*452*	*SG150*	*510 ok*	*714 ok*	*>10 ok*

Reinforcing Quantities (no waste included):
SG150 6.33 sy/ft

NOTE: THESE CALCULATIONS ARE FOR PRELIMINARY DESIGN ONLY AND SHOULD NOT BE USED FOR CONSTRUCTION WITHOUT REVIEW BY A QUALIFIED ENGINEER

DETAILED CALCULATIONS

Project: *Villas at Winter Park* **Date:** *3/25/2016*
Project No: *SCI14100CSD* **Designer:** *H. McCutcheon*
Case: *Case 15*
Design Method: *Rankine-w/Batter (modified soil interface)*

Soil Parameters:	**ϕ deg**	**c psf**	**γ pcf**
Reinforced Fill	*34*	*0*	*110*
Retained Zone	*27*	*50*	*120*
Foundation Soil	*38*	*50*	*130*

Leveling Pad: ***Crushed Stone***

Modular Concrete Unit: *CompacIII*
Depth: *1.00 ft* **In-Place Wt:** *120 pcf*

Geometry

Internal Stability
(Sloping geometry)
Height: 10.00 ft
BackSlope:
Angle: 26.6 deg
Height: 7.50 ft
Batter: 4.00deg
Surcharge:
Dead Load: 0.00 psf
Live Load: 0 psf
Base width: 9.5 ft

External Stability
(Broken geometry)
Height: 14.40 ft
Angle: 26.6 deg
Height: 3.10 ft
Batter: 4.00deg
Dead Load: 0.00 psf
Live Load:250.00 psf

Earth Pressures:

$$k_a = \frac{\sin^2(\alpha+\phi)}{\sin^2\alpha\,\sin(\alpha-\delta)\left[1+\sqrt{\frac{\sin(\phi+\delta)\sin(\phi-\beta)}{\sin(\alpha-\delta)\sin(\alpha+\beta)}}\right]^2}$$

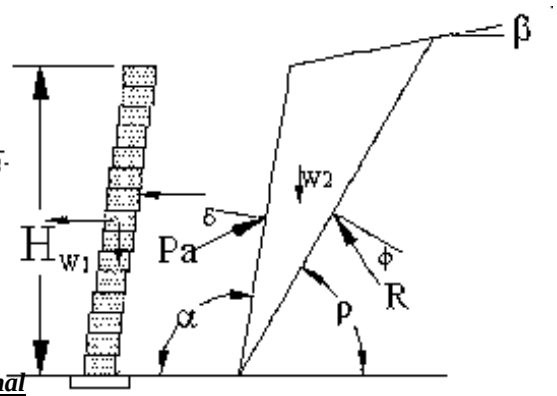

Internal		***External***	
ϕ	= 34 deg	ϕ	= 27 deg
α	= 94.00 deg	α	= 94.00 deg
β	= 26.57 deg	β	= 26.57 deg
δ	= 20.56 deg	δ	= 12.13 deg
H	= 10.00 ft		
ka	= 0.353	ka	= 0.437

Hinge Height: Hinge Ht= Not applicable

Reinforcing Parameters: *Strata-Grid Geogrids*

	Tult	RFcr	RFd	RFid	LTDS	FS	Tal	Ci	Cds
SG150	*1875*	*1.65*	*1.10*	*1.35*	*765*	*1.50*	*510*	*0.90*	*0.90*

Connection Parameters: Strata-Grid Geogrids

	Frictional 1	Break Pt	Frictional 2
SG150	*Tcl= Ntan(16.00) + 750*	*1609*	*Tcl= Ntan(0.00) +1211*

Unit Shear Data

Shear = N tan(40.00)
Inter-Unit ShearShear = N tan(34.00) + 900.00

Calculated Reactions

For the "modified" design method, the back of the mass assumed to be vertical for calculation of resisting forces.
effective sliding length = 9.50 ft

$Pa := 0.5H\cdot(\gamma\cdot H\cdot ka - 2c\cdot\sqrt{ka})$ $\quad P_q := q\cdot H\cdot ka$

$Pa_h := Pa\cdot\cos(\delta)$ $\quad Pq_h := P_q\cdot\cos(\delta)$

$Pa_v := Pa\cdot\sin(\delta)$ $\quad Pq_v := P_q\cdot\sin(\delta)$

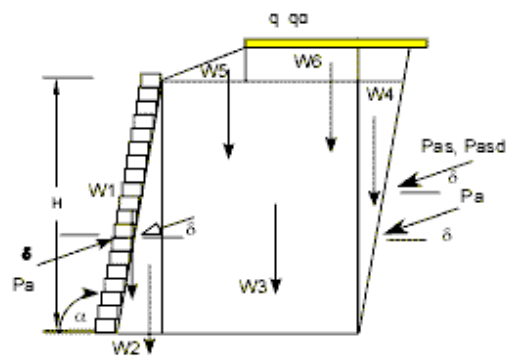

Reactions are:

Area	Force	Arm-x	Arm-y	Moment
W1	*1200.00*	*[0.850]*	*5.000*	*1019.56*
W2	*384.60*	*[1.466]*	*3.333*	*563.89*
W3	*8580.80*	*[5.600]*	*5.000*	*48049.37*
W5	*1825.94*	*[6.900]*	*11.300*	*12598.52*
Pa_h	*4914.39*	*9.500*	*[4.802]*	*-23597.22*
Pa_v	*1143.59*	*[9.500]*	*4.802*	*10864.12*
Pql_h	*729.57*	*9.500*	*[7.202]*	*-5254.69*
Pql_v	*169.77*	*[9.500]*	*7.202*	*1612.83*
Sum V =	*13304.70*		*Sum Mr =*	*74708.28*
Sum H =	*5643.96*		*Sum Mo =*	*-28851.91*

Calculate Sliding at Base

For Sliding, Vertical Force = W1+W2+W3+W4+W5+W6+qd	= 13305
The resisting force within the rein. mass , Rf_1	= N tan(34)
	= 8974
The resisting force at the foundation, Rf_2	= N tan(38) + (9.50 x 50.00)
	= 10870
The driving forces, Df, are the sum of the external earth pressures:	
Pa_h + Pql_h + Pqd_h	= 5644
the Factor of Safety for Sliding is Rf_1/Df	= 1.59

Calculate Overturning:

Overturning moment: Mo = Sum Mo	= -28852
Resisting moment: Mr = Sum Mr	= 74708
Factor of Safety of Overturning: Mr/Mo	= 2.59

Calculate eccentricity at base: with Surcharge / without Surcharge
Sum Moments = 45856 / 45856
Sum Vertical = 13305/13305
Base Length = 9.50
e = 1.303 / 1.303

Calculate Ultimate Bearing based on shear:
where:

Nq = 48.93
Nc = 61.35
Ng = 78.02 (ref. Vesic(1973, 1975) eqns)
Qult = 50750 psf

Equivalent footing width, B' = L -2e = 6.89 / 6.89
Bearing pressure = sumV/B' = 1930 psf / 1930 psf [bearing is greatest without liveload]
Factor of Safety for bearing = Qult/bearing= 26.29

Calculate Tensions in Reinforcing:
The tensions in the reinforcing layer, and the assumed load at the connection,
is the vertical area supported by each respective layer, Sv.Column [7] is '2c sqrt(ka)'.

Table of Results ppf

[1] Layer	[2] Depth zi	[3] h1	[4] ka/rho	[5] Pa	[6] (Pas+Pasd)	[7] c	[8] (5+6)cos(d)-7	[9] Ti	[10] Tcl	[11] Tsc
6	1.33	1.17	0.353/49	106	0	0	99	99	531	N/A
5	3.33	3.33	0.353/49	259	0	0	243	243	576	N/A
4	5.33	5.17	0.353/48	334	0	0	313	313	622	N/A
3	6.67	6.67	0.353/48	345	0	0	323	323	653	N/A
2	8.00	8.00	0.353/48	414	0	0	388	388	684	N/A
1	9.33	9.33	0.353/50	483	0	0	452	452	714	N/A

Calculate sliding on the reinforcing:

The shear value is the lessor of base-shear or inter-unit shear.

[1] Layer	[2] Depth zi	[3] N	[4] Li	[5] Cds	[6] τ	[7] RF	[8] ka	[9] Pa	[10] Pas+Pasd	[11] DF	[12] FS
6	*1.33*	*3482*	*8.50*	*0.90*	*1008*	*3122*	*0.524*	*1035*	*272*	*1075*	*2.91*
5	*3.33*	*5464*	*8.50*	*0.90*	*1170*	*4487*	*0.491*	*1764*	*402*	*1852*	*2.42*
4	*5.33*	*7452*	*8.50*	*0.90*	*1332*	*5856*	*0.470*	*2674*	*527*	*2803*	*2.09*
3	*6.67*	*8780*	*8.50*	*0.90*	*1440*	*6770*	*0.461*	*3391*	*594*	*3529*	*1.92*
2	*8.00*	*10110*	*8.50*	*0.90*	*1548*	*7685*	*0.448*	*4140*	*699*	*4325*	*1.78*
1	*9.33*	*11439*	*8.50*	*0.90*	*1655*	*8599*	*0.438*	*4955*	*802*	*5185*	*1.66*

Calculate pullout of each layer

The FoS (R*/S*) of pullout is calculated as the individual
layer pullout (Rf) divided by the tension (Df) in that layer.
The angle of the failure plane is: 28.00 degrees from vertical.

[1] Layer	[2] Depth zi	[3] Le	[4] SumV	[5] Ci	[6] POi	[7] Ti	[8] FS_PO
6	*1.33*	*4.50*	*2322*	*0.90*	*2819*	*99*	*28.45*
5	*3.33*	*5.42*	*3796*	*0.90*	*4608*	*243*	*18.99*
4	*5.33*	*6.35*	*5609*	*0.90*	*6810*	*313*	*21.75*
3	*6.67*	*6.96*	*7007*	*0.90*	*8507*	*323*	*26.32*
2	*8.00*	*7.58*	*8555*	*0.90*	*10387*	*388*	*26.78*
1	*9.33*	*8.19*	*10255*	*0.90*	*12451*	*452*	*27.55*

Check Shear & Bending at each layer

Bending on the top layer is the FOS of overturning of the Units
(Most surcharge loads need to be moved back from the face.)

[1] Layer	*[2] Depth zi*	*[3] Si*	*[4] DM*	*[5] Pv*	*[6] RM*	*[7] FS_b*	*[8] DS*	*[9] RS*	*FS_Sh*
6	*1.33*	*1.33*	*14*	*160*	*87*	*6.08*	*32*	*1008*	*31.16*
5	*3.33*	*2.00*	*49*	*280*	*235*	*4.85*	*103*	*1170*	*11.34*
4	*5.33*	*2.00*	*85*	*520*	*379*	*4.46*	*176*	*1332*	*7.58*
3	*6.67*	*1.33*	*50*	*720*	*490*	*9.75*	*154*	*1440*	*9.38*
2	*8.00*	*1.33*	*61*	*880*	*589*	*9.65*	*186*	*1548*	*8.33*
1	*9.33*	*1.33*	*72*	*1040*	*689*	*9.60*	*218*	*1655*	*7.60*

RETAINING WALL DESIGN

KeyWall_2012 Version 3.7.2 Build 16

Project: *Villas at Winter Park*
Project No: *SCI14100CSD*
Case: *Case 16*
Design Method: *Rankine-w/Batter (modified soil interface)*

Date: *3/25/2016*
Designer: *H. McCutcheon*

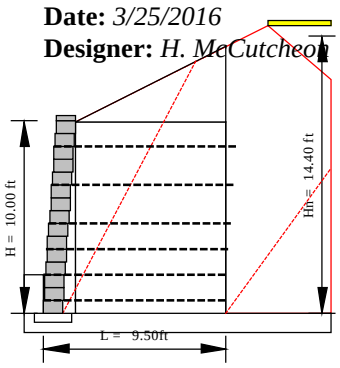

Design Parameters

Soil Parameters:

	ϕ deg	c psf	γ pcf
Reinforced Fill	*34*	*0*	*110*
Retained Zone	*27*	*50*	*120*
Foundation Soil	*38*	*50*	*130*

Reinforced Fill Type: *2.5" minus Crushed Stone or Gravel*
Unit Fill: *Crushed Stone, 1 inch minus*

Minimum Design Factors of Safety

sliding:	1.50	pullout:	1.50	uncertainties:	1.50
overturning:	1.50	shear:	1.50	connection:	1.50
bearing:	1.50	bending:	1.50		

Design Preferences

Reinforcing Parameters: *Strata-Grid Geogrids*

	Tult	RFcr	RFd	RFid	LTDS	FS	Tal	Ci	Cds
SG150	*1875*	*1.65*	*1.10*	*1.35*	*765*	*1.50*	*510*	*0.90*	*0.90*

Analysis: ***Case: Case 16***
6' Wall at Gregory Street

Unit Type:	*CompacIII / 120.00 pcf*	*Wall Batter: 4.00 deg (Hinge Ht N/A)*
Leveling Pad:	*Crushed Stone*	
Wall Ht:	*10.00 ft*	*embedment: 2.00 ft*
BackSlope:	*26.57 deg. slope,*	*10.00 ft long*
Surcharge:	*LL: 250 psf uniform surcharge*	*DL: 0 psf uniform surcharge*
	Load Width: 20.00 ft	*Load Width: 0.00 ft*

Results:

	Sliding	Overturning	Bearing	Shear	Bending
Factors of Safety:	*1.52*	*2.26*	*21.96*	*7.32*	*4.31*

Calculated Bearing Pressure: *2079 / 2079 psf*
Eccentricity at base: 1.81 ft
Reinforcing: (ft & lbs/ft)

Layer	Height	Length	Calc. Tension	Reinf. Type	Allow Ten Tal	Pk Conn Tcl	Pullout FS
6	*8.67*	*9.5*	*103*	*SG150*	*510 ok*	*531 ok*	*>10 ok*
5	*6.67*	*9.5*	*252*	*SG150*	*510 ok*	*576 ok*	*>10 ok*
4	*4.67*	*9.5*	*326*	*SG150*	*510 ok*	*622 ok*	*>10 ok*
3	*3.33*	*9.5*	*328*	*SG150*	*510 ok*	*653 ok*	*>10 ok*
2	*2.00*	*9.5*	*399*	*SG150*	*510 ok*	*684 ok*	*>10 ok*
1	*0.67*	*9.5*	*466*	*SG150*	*510 ok*	*714 ok*	*>10 ok*

Reinforcing Quantities (no waste included):
SG150 6.33 sy/ft

NOTE: THESE CALCULATIONS ARE FOR PRELIMINARY DESIGN ONLY AND SHOULD NOT BE USED FOR CONSTRUCTION WITHOUT REVIEW BY A QUALIFIED ENGINEER

DETAILED CALCULATIONS

Project: *Villas at Winter Park* **Date:** *3/25/2016*
Project No: *SCI14100CSD* **Designer:** *H. McCutcheon*
Case: *Case 16*
Design Method: *Rankine-w/Batter (modified soil interface)*

Soil Parameters:	**ϕ deg**	**c psf**	**γ pcf**
Reinforced Fill	*34*	*0*	*110*
Retained Zone	*27*	*50*	*120*
Foundation Soil	*38*	*50*	*130*

Leveling Pad: ***Crushed Stone***

Modular Concrete Unit: *CompacIII*
Depth: *1.00 ft* **In-Place Wt:** *120 pcf*

Geometry

Internal Stability
(Broken geometry)
Height: 10.00 ft
BackSlope:
Angle: 26.6 deg
Height: 5.00 ft
Batter: 4.00deg
Surcharge:
Dead Load: 0.00 psf
Live Load: 250.00 psf
Base width: 9.5 ft

External Stability
(Broken geometry)
Height: 14.40 ft
Angle: 26.6 deg
Height: 0.60 ft
Batter: 4.00deg
Dead Load: 0.00 psf
Live Load:250.00 psf

Earth Pressures:

$$k_a = \frac{\sin^2(\alpha+\phi)}{\sin^2\alpha\,\sin(\alpha-\delta)\left[1+\sqrt{\frac{\sin(\phi+\delta)\sin(\phi-\beta)}{\sin(\alpha-\delta)\sin(\alpha+\beta)}}\right]^2}$$

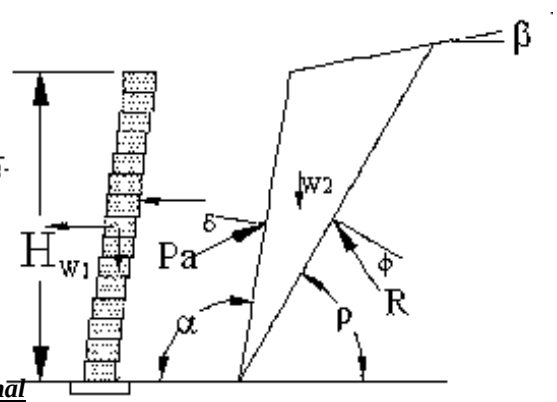

Internal		***External***	
ϕ	= 34 deg	ϕ	= 27 deg
α	= 94.00 deg	α	= 94.00 deg
β	= 26.57 deg	β	= 26.57 deg
δ	= 14.04 deg	δ	= 2.37 deg
H	= 10.00 ft		
ka	= 0.336	ka	= 0.381

Hinge Height: Hinge Ht= Not applicable

Reinforcing Parameters: *Strata-Grid Geogrids*

	Tult	RFcr	RFd	RFid	LTDS	FS	Tal	Ci	Cds
SG150	*1875*	*1.65*	*1.10*	*1.35*	*765*	*1.50*	*510*	*0.90*	*0.90*

Connection Parameters: Strata-Grid Geogrids

	Frictional 1	Break Pt	Frictional 2
SG150	*Tcl= Ntan(16.00) + 750*	*1609*	*Tcl= Ntan(0.00) +1211*

Unit Shear Data

Shear = N tan(40.00)
Inter-Unit ShearShear = N tan(34.00) + 900.00

Calculated Reactions

For the "modified" design method, the back of the mass assumed to be vertical for calculation of resisting forces.
effective sliding length = 9.50 ft

$Pa := 0.5H\cdot(\gamma\cdot H\cdot ka - 2c\cdot\sqrt{ka})$ $\quad P_q := q\cdot H\cdot ka$

$Pa_h := Pa\cdot\cos(\delta)$ $\quad Pq_h := P_q\cdot\cos(\delta)$

$Pa_v := Pa\cdot\sin(\delta)$ $\quad Pq_v := P_q\cdot\sin(\delta)$

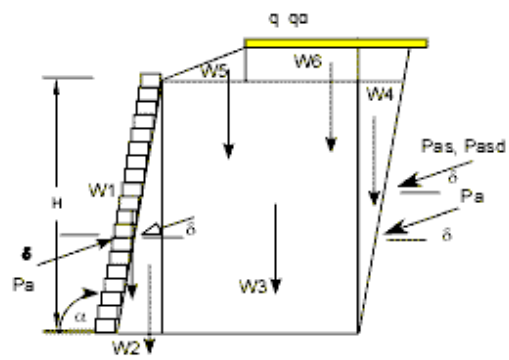

Reactions are:

Area	Force	Arm-x	Arm-y	Moment
W1	*1200.00*	*[0.850]*	*5.000*	*1019.56*
W2	*384.60*	*[1.466]*	*3.333*	*563.89*
W3	*8580.80*	*[5.600]*	*5.000*	*48049.37*
W5	*1825.94*	*[6.900]*	*11.300*	*12598.52*
Pa_h	*4379.12*	*9.500*	*[4.802]*	*-21027.02*
Pa_v	*196.07*	*[9.500]*	*4.802*	*1862.62*
Pql_h	*1042.14*	*9.500*	*[7.202]*	*-7505.96*
Pql_v	*46.66*	*[9.500]*	*7.202*	*443.26*
Sum V =	*12234.06*		*Sum Mr =*	*64537.22*
Sum H =	*5421.26*		*Sum Mo =*	*-28532.98*

Calculate Sliding at Base

For Sliding, Vertical Force = W1+W2+W3+W4+W5+W6+qd	= 12234
The resisting force within the rein. mass , Rf_1	= N tan(34)
	= 8252
The resisting force at the foundation, Rf_2	= N tan(38) + (9.50 x 50.00)
	= 10033
The driving forces, Df, are the sum of the external earth pressures:	
Pa_h + Pql_h + Pqd_h	= 5421
the Factor of Safety for Sliding is Rf_1/Df	= 1.52

Calculate Overturning:

Overturning moment: Mo = Sum Mo	= -28533
Resisting moment: Mr = Sum Mr	= 64537
Factor of Safety of Overturning: Mr/Mo	= 2.26

Calculate eccentricity at base: with Surcharge / without Surcharge
Sum Moments = 36004 / 36004
Sum Vertical = 12234/12234
Base Length = 9.50
e = 1.807 / 1.807

Calculate Ultimate Bearing based on shear:
where:

Nq = 48.93
Nc = 61.35
Ng = 78.02 (ref. Vesic(1973, 1975) eqns)
Qult = 45641 psf

Equivalent footing width, B' = L -2e = 5.89 / 5.89
Bearing pressure = sumV/B' = 2079 psf / 2079 psf [bearing is greatest without liveload]
Factor of Safety for bearing = Qult/bearing= 21.96

Calculate Tensions in Reinforcing:
The tensions in the reinforcing layer, and the assumed load at the connection,
is the vertical area supported by each respective layer, Sv.Column [7] is '2c sqrt(ka)'.

Table of Results ppf

[1] Layer	[2] Depth zi	[3] h1	[4] ka/rho	[5] Pa	[6] (Pas+Pasd)	[7] c	[8] (5+6)cos(d)-7	[9] Ti	[10] Tcl	[11] Tsc
6	1.33	1.17	0.355/49	106	0	0	103	103	531	N/A
5	3.33	3.33	0.355/49	260	0	0	252	252	576	N/A
4	5.33	5.17	0.354/50	336	0	0	326	326	622	N/A
3	6.67	6.67	0.335/46	328	11	0	328	328	653	N/A
2	8.00	8.00	0.340/48	398	13	0	399	399	684	N/A
1	9.33	9.33	0.341/50	466	14	0	466	466	714	N/A

Calculate sliding on the reinforcing:

The shear value is the lessor of base-shear or inter-unit shear.

[1] Layer	[2] Depth zi	[3] N	[4] Li	[5] Cds	[6] τ	[7] RF	[8] ka	[9] Pa	[10] Pas+Pasd	[11] DF	[12] FS
6	*1.33*	*3208*	*8.50*	*0.90*	*1008*	*2955*	*0.435*	*859*	*469*	*1139*	*2.59*
5	*3.33*	*5095*	*8.50*	*0.90*	*1170*	*4263*	*0.408*	*1467*	*608*	*1826*	*2.33*
4	*5.33*	*6904*	*8.50*	*0.90*	*1332*	*5523*	*0.396*	*2256*	*765*	*2712*	*2.04*
3	*6.67*	*8098*	*8.50*	*0.90*	*1440*	*6355*	*0.391*	*2874*	*869*	*3394*	*1.87*
2	*8.00*	*9280*	*8.50*	*0.90*	*1548*	*7181*	*0.386*	*3566*	*973*	*4150*	*1.73*
1	*9.33*	*10452*	*8.50*	*0.90*	*1655*	*8000*	*0.382*	*4331*	*1077*	*4979*	*1.61*

Calculate pullout of each layer

The FoS (R*/S*) of pullout is calculated as the individual
layer pullout (Rf) divided by the tension (Df) in that layer.
The angle of the failure plane is: 28.00 degrees from vertical.

[1] Layer	[2] Depth zi	[3] Le	[4] SumV	[5] Ci	[6] POi	[7] Ti	[8] FS_PO
6	*1.33*	*4.50*	*2322*	*0.90*	*2819*	*103*	*27.36*
5	*3.33*	*5.42*	*3796*	*0.90*	*4608*	*252*	*18.27*
4	*5.33*	*6.35*	*5609*	*0.90*	*6810*	*326*	*20.91*
3	*6.67*	*6.96*	*7007*	*0.90*	*8507*	*328*	*25.91*
2	*8.00*	*7.58*	*8555*	*0.90*	*10387*	*399*	*26.02*
1	*9.33*	*8.19*	*10255*	*0.90*	*12451*	*466*	*26.72*

Check Shear & Bending at each layer

Bending on the top layer is the FOS of overturning of the Units
(Most surcharge loads need to be moved back from the face.)

[1] Layer	*[2] Depth zi*	*[3] Si*	*[4] DM*	*[5] Pv*	*[6] RM*	*[7] FS_b*	*[8] DS*	*[9] RS*	*FS_Sh*
6	*1.33*	*1.33*	*15*	*160*	*87*	*5.85*	*34*	*1008*	*29.96*
5	*3.33*	*2.00*	*50*	*280*	*235*	*4.67*	*107*	*1170*	*10.91*
4	*5.33*	*2.00*	*88*	*520*	*379*	*4.31*	*182*	*1332*	*7.32*
3	*6.67*	*1.33*	*51*	*720*	*490*	*9.54*	*157*	*1440*	*9.19*
2	*8.00*	*1.33*	*63*	*880*	*589*	*9.42*	*190*	*1548*	*8.12*
1	*9.33*	*1.33*	*74*	*1040*	*689*	*9.31*	*225*	*1655*	*7.37*

RETAINING WALL DESIGN

KeyWall_2012 Version 3.7.2 Build 16

Project: *Villas at Winter Park* **Date:** *3/25/2016*
Project No: *SCI14100CSD* **Designer:** *H. McCutcheon*
Case: *Case 17*
Design Method: *Rankine-w/Batter (modified soil interface)*

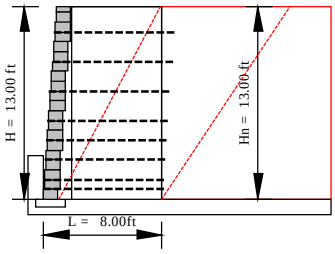

Design Parameters

Soil Parameters:	**ϕ deg**	**c psf**	**γ pcf**
Reinforced Fill	*34*	*0*	*110*
Retained Zone	*27*	*50*	*120*
Foundation Soil	*38*	*50*	*130*

Reinforced Fill Type: *2.5" minus Crushed Stone or Gravel*
Unit Fill: *Crushed Stone, 1 inch minus*

Minimum Design Factors of Safety

sliding:	1.50	pullout:	1.50	uncertainties:	1.50
overturning:	1.50	shear:	1.50	connection:	1.50
bearing:	1.50	bending:	1.50		

Design Preferences

Reinforcing Parameters: *Strata-Grid Geogrids*

	Tult	*RFcr*	*RFd*	*RFid*	*LTDS*	*FS*	*Tal*	*Ci*	*Cds*
SG150	*1875*	*1.65*	*1.10*	*1.35*	*765*	*1.50*	*510*	*0.90*	*0.90*

Analysis: ***Case: Case 17***
10' cul-de-sac wall

Unit Type:	*CompacIII / 120.00 pcf*	*Wall Batter: 4.00 deg (Hinge Ht N/A)*
Leveling Pad:	*Crushed Stone*	
Wall Ht:	*13.00 ft*	*embedment: 3.00 ft*
Level Backfill	*Offset: 0.00 ft*	
Surcharge:	*LL: 0 psf uniform surcharge*	*DL: 0 psf uniform surcharge*
	Load Width: 0.00 ft	*Load Width: 0.00 ft*

Results:	***Sliding***	***Overturning***	***Bearing***	***Shear***	***Bending***
Factors of Safety:	*2.29*	*3.27*	*27.47*	*7.51*	*5.12*

Calculated Bearing Pressure: *1879 / 1879 psf*
Eccentricity at base: 1.09 ft
Reinforcing: (ft & lbs/ft)

Layer	**Height**	**Length**	**Calc. Tension**	**Reinf. Type**	**Allow Ten Tal**	**Pk Conn Tcl**	**Pullout FS**
8	*11.33*	*8.0*	*100*	*SG150*	*510 ok*	*538 ok*	*3.91 ok*
7	*9.33*	*8.0*	*207*	*SG150*	*510 ok*	*584 ok*	*6.36 ok*
6	*7.33*	*8.0*	*320*	*SG150*	*510 ok*	*630 ok*	*8.54 ok*
5	*5.33*	*8.0*	*353*	*SG150*	*510 ok*	*676 ok*	*>10 ok*
4	*4.00*	*8.0*	*339*	*SG150*	*510 ok*	*706 ok*	*>10 ok*
3	*2.67*	*8.0*	*389*	*SG150*	*510 ok*	*737 ok*	*>10 ok*
2	*1.33*	*8.0*	*325*	*SG150*	*510 ok*	*768 ok*	*>10 ok*
1	*0.67*	*8.0*	*353*	*SG150*	*510 ok*	*783 ok*	*>10 ok*

Reinforcing Quantities (no waste included):
SG150 7.11 sy/ft

NOTE: THESE CALCULATIONS ARE FOR PRELIMINARY DESIGN ONLY AND SHOULD NOT BE USED FOR CONSTRUCTION WITHOUT REVIEW BY A QUALIFIED ENGINEER

DETAILED CALCULATIONS

Project: *Villas at Winter Park* **Date:** *3/25/2016*
Project No: *SCI14100CSD* **Designer:** *H. McCutcheon*
Case: *Case 17*
Design Method: *Rankine-w/Batter (modified soil interface)*

Soil Parameters:	**ϕ deg**	**c psf**	**γ pcf**
Reinforced Fill	*34*	*0*	*110*
Retained Zone	*27*	*50*	*120*
Foundation Soil	*38*	*50*	*130*

Leveling Pad: ***Crushed Stone***

Modular Concrete Unit: *CompacIII*
Depth: *1.00 ft* **In-Place Wt:** *120 pcf*

Geometry

Internal Stability
(Horizontal geometry)
Height: 13.00 ft
BackSlope:
Angle: 0.0 deg
Height: 0.00 ft
Batter: 4.00deg
Surcharge:
Dead Load: 0.00 psf
Live Load: 0.00 psf
Base width: 8.0 ft

External Stability
(Horizontal geometry)
Height: 13.00 ft
Angle: 0.00 deg
Height: 0.00 ft
Batter: 4.00deg
Dead Load: 0.00 psf
Live Load:0.00 psf

Earth Pressures:

$$k_a = \frac{\sin^2(\alpha+\phi)}{\sin^2\alpha\,\sin(\alpha-\delta)\left[1+\sqrt{\frac{\sin(\phi+\delta)\sin(\phi-\beta)}{\sin(\alpha-\delta)\sin(\alpha+\beta)}}\right]^2}$$

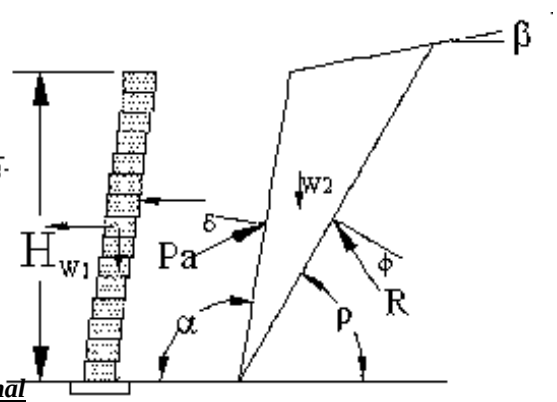

Internal		***External***	
ϕ	= 34 deg	ϕ	= 27 deg
α	= 94.00 deg	α	= 94.00 deg
β	= 0.00 deg	β	= 0.00 deg
δ	= 0.00 deg	δ	= 0.00 deg
H	= 13.00 ft		
ka	= 0.257	ka	= 0.356

Hinge Height: Hinge Ht= Not applicable

Reinforcing Parameters: *Strata-Grid Geogrids*

	Tult	RFcr	RFd	RFid	LTDS	FS	Tal	Ci	Cds
SG150	*1875*	*1.65*	*1.10*	*1.35*	*765*	*1.50*	*510*	*0.90*	*0.90*

Connection Parameters: Strata-Grid Geogrids

	Frictional 1	Break Pt	Frictional 2
SG150	*Tcl= Ntan(16.00) + 750*	*1609*	*Tcl= Ntan(0.00) +1211*

Unit Shear Data

Shear = N tan(40.00)
Inter-Unit ShearShear = N tan(34.00) + 900.00

Calculated Reactions

For the "modified" design method, the back of the mass assumed to be vertical for calculation of resisting forces.
effective sliding length = 8.00 ft

$Pa := 0.5H\cdot(\gamma\cdot H\cdot ka - 2c\cdot\sqrt{ka})$

$Pa_h := Pa\cdot\cos(\delta)$

$Pa_v := Pa\cdot\sin(\delta)$

$P_q := q\cdot H\cdot ka$

$Pq_h := P_q\cdot\cos(\delta)$

$Pq_v := P_q\cdot\sin(\delta)$

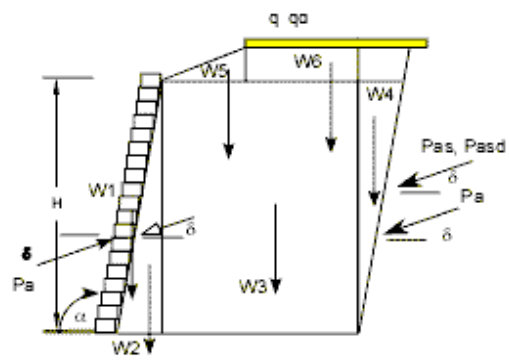

Reactions are:

Area	Force	Arm-x	Arm-y	Moment
W1	*1560.00*	*[0.955]*	*6.500*	*1489.06*
W2	*649.97*	*[1.606]*	*4.333*	*1043.87*
W3	*8710.06*	*[4.955]*	*6.500*	*43154.21*
Pa_h	*3221.82*	*8.000*	*[4.333]*	*-13961.22*
Sum V =	*10920.03*		*Sum Mr =*	*45687.14*
Sum H =	*3221.82*		*Sum Mo =*	*-13961.22*

Calculate Sliding at Base

For Sliding, Vertical Force = W1+W2+W3+W4+W5+W6+qd	= 10920
The resisting force within the rein. mass , Rf_1	= N tan(34)
	= 7366
The resisting force at the foundation, Rf_2	= N tan(38) + (8.00 x 50.00)
	= 8932
The driving forces, Df, are the sum of the external earth pressures:	
Pa_h + Pql_h + Pqd_h	= 3222
the Factor of Safety for Sliding is Rf_1/Df	= 2.29

Calculate Overturning:

Overturning moment: Mo = Sum Mo	= -13961
Resisting moment: Mr = Sum Mr	= 45687
Factor of Safety of Overturning: Mr/Mo	= 3.27

Calculate eccentricity at base: with Surcharge / without Surcharge
Sum Moments = 31726 / 31726
Sum Vertical = 10920/10920
Base Length = 8.00
e = 1.095 / 1.095

Calculate Ultimate Bearing based on shear:
where:

Nq = 48.93
Nc = 61.35
Ng = 78.02 (ref. Vesic(1973, 1975) eqns)
Qult = 51620 psf

Equivalent footing width, B' = L -2e = 5.81 / 5.81
Bearing pressure = sumV/B' = 1879 psf / 1879 psf [bearing is greatest without liveload]
Factor of Safety for bearing = Qult/bearing= 27.47

Calculate Tensions in Reinforcing:
The tensions in the reinforcing layer, and the assumed load at the connection,
is the vertical area supported by each respective layer, Sv.Column [7] is '2c sqrt(ka)'.

Table of Results ppf

[1] Layer	[2] Depth zi	[3] h1	[4] ka/rho	[5] Pa	[6] (Pas+Pasd)	[7] c	[8] (5+6)cos(d)-7	[9] Ti	[10] Tcl	[11] Tsc
8	1.67	1.33	0.257/60	100	0	0	100	100	538	N/A
7	3.67	3.67	0.257/60	207	0	0	207	207	584	N/A
6	5.67	5.67	0.257/60	320	0	0	320	320	630	N/A
5	7.67	7.50	0.257/60	353	0	0	353	353	676	N/A
4	9.00	9.00	0.257/60	339	0	0	339	339	706	N/A
3	10.33	10.33	0.257/60	389	0	0	389	389	737	N/A
2	11.67	11.50	0.257/60	325	0	0	325	325	768	N/A
1	12.33	12.50	0.257/60	353	0	0	353	353	783	N/A

Calculate sliding on the reinforcing:

The shear value is the lessor of base-shear or inter-unit shear.

[1] Layer	[2] Depth zi	[3] N	[4] Li	[5] Cds	[6] τ	[7] RF	[8] ka	[9] Pa	[10] Pas+Pasd	[11] DF	[12] FS
8	*1.67*	*1273*	*7.00*	*0.90*	*1035*	*1807*	*0.356*	*59*	*0*	*10*	*188.08*
7	*3.67*	*2772*	*7.00*	*0.90*	*1197*	*2879*	*0.356*	*287*	*0*	*178*	*16.20*
6	*5.67*	*4240*	*7.00*	*0.90*	*1359*	*3932*	*0.356*	*686*	*0*	*517*	*7.61*
5	*7.67*	*5677*	*7.00*	*0.90*	*1521*	*4967*	*0.356*	*1255*	*0*	*1027*	*4.84*
4	*9.00*	*6618*	*7.00*	*0.90*	*1628*	*5646*	*0.356*	*1730*	*0*	*1462*	*3.86*
3	*10.33*	*7546*	*7.00*	*0.90*	*1736*	*6317*	*0.356*	*2281*	*0*	*1972*	*3.20*
2	*11.67*	*8460*	*7.00*	*0.90*	*1844*	*6980*	*0.356*	*2907*	*0*	*2559*	*2.73*
1	*12.33*	*8912*	*7.00*	*0.90*	*1898*	*7308*	*0.356*	*3249*	*0*	*2881*	*2.54*

Calculate pullout of each layer

The FoS (R*/S*) of pullout is calculated as the individual
layer pullout (Rf) divided by the tension (Df) in that layer.
The angle of the failure plane is: 28.00 degrees from vertical.

[1] Layer	[2] Depth zi	[3] Le	[4] SumV	[5] Ci	[6] POi	[7] Ti	[8] FS_PO
8	*1.67*	*1.77*	*324*	*0.90*	*393*	*100*	*3.91*
7	*3.67*	*2.69*	*1085*	*0.90*	*1317*	*207*	*6.36*
6	*5.67*	*3.61*	*2252*	*0.90*	*2735*	*320*	*8.54*
5	*7.67*	*4.54*	*3826*	*0.90*	*4646*	*353*	*13.15*
4	*9.00*	*5.15*	*5101*	*0.90*	*6194*	*339*	*18.27*
3	*10.33*	*5.77*	*6557*	*0.90*	*7961*	*389*	*20.45*
2	*11.67*	*6.38*	*8193*	*0.90*	*9947*	*325*	*30.62*
1	*12.33*	*6.69*	*9079*	*0.90*	*11023*	*353*	*31.21*

Check Shear & Bending at each layer

Bending on the top layer is the FOS of overturning of the Units
(Most surcharge loads need to be moved back from the face.)

[1] Layer	*[2] Depth zi*	*[3] Si*	*[4] DM*	*[5] Pv*	*[6] RM*	*[7] FS_b*	*[8] DS*	*[9] RS*	*FS_Sh*
8	*1.67*	*1.67*	*22*	*200*	*112*	*5.12*	*39*	*1035*	*26.37*
7	*3.67*	*2.00*	*42*	*320*	*259*	*6.12*	*89*	*1197*	*13.38*
6	*5.67*	*2.00*	*71*	*560*	*403*	*5.70*	*146*	*1359*	*9.31*
5	*7.67*	*2.00*	*99*	*800*	*546*	*5.52*	*202*	*1521*	*7.51*
4	*9.00*	*1.33*	*54*	*1000*	*664*	*12.36*	*163*	*1628*	*9.98*
3	*10.33*	*1.33*	*62*	*1160*	*763*	*12.29*	*188*	*1736*	*9.22*
2	*11.67*	*1.33*	*70*	*1320*	*862*	*12.24*	*213*	*1844*	*8.64*
1	*12.33*	*0.67*	*19*	*1440*	*947*	*49.83*	*115*	*1898*	*16.57*

RETAINING WALL DESIGN

KeyWall_2012 Version 3.7.2 Build 16

Project: *Villas at Winter Park* **Date:** *3/25/2016*
Project No: *SCI14100CSD* **Designer:** *H. McCutcheon*
Case: *Case 18*
Design Method: *Rankine-w/Batter (modified soil interface)*

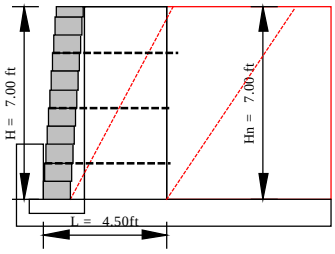

Design Parameters

Soil Parameters:	**ϕ deg**	**c psf**	**γ pcf**
Reinforced Fill	*34*	*0*	*110*
Retained Zone	*27*	*50*	*120*
Foundation Soil	*38*	*50*	*130*

Reinforced Fill Type: *2.5" minus Crushed Stone or Gravel*
Unit Fill: *Crushed Stone, 1 inch minus*

Minimum Design Factors of Safety

sliding:	1.50	pullout:	1.50	uncertainties:	1.50
overturning:	1.50	shear:	1.50	connection:	1.50
bearing:	1.50	bending:	1.50		

Design Preferences

Reinforcing Parameters: *Strata-Grid Geogrids*

	Tult	*RFcr*	*RFd*	*RFid*	*LTDS*	*FS*	*Tal*	*Ci*	*Cds*
SG150	*1875*	*1.65*	*1.10*	*1.35*	*765*	*1.50*	*510*	*0.90*	*0.90*

Analysis: ***Case: Case 18***
5' cul-de-sac wall

Unit Type:	*CompacIII / 120.00 pcf*	*Wall Batter: 4.00 deg (Hinge Ht N/A)*
Leveling Pad:	*Crushed Stone*	
Wall Ht:	*7.00 ft*	*embedment: 2.00 ft*
Level Backfill	*Offset: 0.00 ft*	
Surcharge:	*LL: 0 psf uniform surcharge*	*DL: 0 psf uniform surcharge*
	Load Width: 0.00 ft	*Load Width: 0.00 ft*

Results:	***Sliding***	***Overturning***	***Bearing***	***Shear***	***Bending***
Factors of Safety:	*2.69*	*4.00*	*35.14*	*9.31*	*5.12*

Calculated Bearing Pressure: *955 / 955 psf*
Eccentricity at base: 0.50 ft
Reinforcing: (ft & lbs/ft)

Layer	**Height**	**Length**	**Calc. Tension**	**Reinf. Type**	**Allow Ten Tal**	**Pk Conn Tcl**	**Pullout FS**
3	*5.33*	*4.5*	*100*	*SG150*	*510 ok*	*538 ok*	*2.30 ok*
2	*3.33*	*4.5*	*207*	*SG150*	*510 ok*	*584 ok*	*4.63 ok*
1	*1.33*	*4.5*	*385*	*SG150*	*510 ok*	*630 ok*	*5.68 ok*

Reinforcing Quantities (no waste included):
SG150 1.50 sy/ft

NOTE: THESE CALCULATIONS ARE FOR PRELIMINARY DESIGN ONLY AND SHOULD NOT BE USED FOR CONSTRUCTION WITHOUT REVIEW BY A QUALIFIED ENGINEER

DETAILED CALCULATIONS

Project: *Villas at Winter Park* **Date:** *3/25/2016*
Project No: *SCI14100CSD* **Designer:** *H. McCutcheon*
Case: *Case 18*
Design Method: *Rankine-w/Batter (modified soil interface)*

Soil Parameters:	**ϕ deg**	**c psf**	**γ pcf**
Reinforced Fill	*34*	*0*	*110*
Retained Zone	*27*	*50*	*120*
Foundation Soil	*38*	*50*	*130*

Leveling Pad: ***Crushed Stone***

Modular Concrete Unit: *CompacIII*
Depth: *1.00 ft* **In-Place Wt:** *120 pcf*

Geometry

Internal Stability
(Horizontal geometry)
Height: 7.00 ft
BackSlope:
Angle: 0.0 deg
Height: 0.00 ft
Batter: 4.00deg
Surcharge:
Dead Load: 0.00 psf
Live Load: 0.00 psf
Base width: 4.5 ft

External Stability
(Horizontal geometry)
Height: 7.00 ft
Angle: 0.00 deg
Height: 0.00 ft
Batter: 4.00deg
Dead Load: 0.00 psf
Live Load:0.00 psf

Earth Pressures:

$$k_a = \frac{\sin^2(\alpha+\phi)}{\sin^2\alpha\,\sin(\alpha-\delta)\left[1+\sqrt{\frac{\sin(\phi+\delta)\sin(\phi-\beta)}{\sin(\alpha-\delta)\sin(\alpha+\beta)}}\right]^2}$$

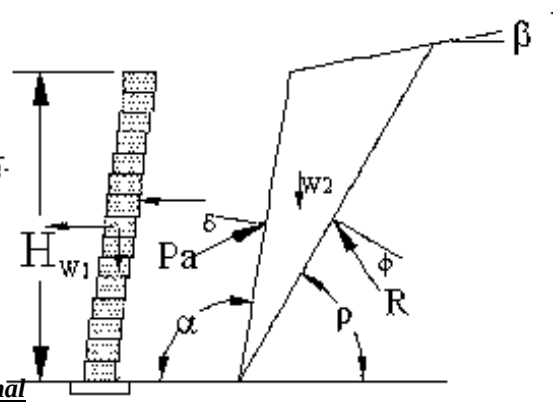

Internal		***External***	
ϕ	= 34 deg	ϕ	= 27 deg
α	= 94.00 deg	α	= 94.00 deg
β	= 0.00 deg	β	= 0.00 deg
δ	= 0.00 deg	δ	= 0.00 deg
H	= 7.00 ft		
ka	= 0.257	ka	= 0.356

Hinge Height: Hinge Ht= Not applicable

Reinforcing Parameters: *Strata-Grid Geogrids*

	Tult	RFcr	RFd	RFid	LTDS	FS	Tal	Ci	Cds
SG150	*1875*	*1.65*	*1.10*	*1.35*	*765*	*1.50*	*510*	*0.90*	*0.90*

Connection Parameters: Strata-Grid Geogrids

	Frictional 1	Break Pt	Frictional 2
SG150	*Tcl= Ntan(16.00) + 750*	*1609*	*Tcl= Ntan(0.00) +1211*

Unit Shear Data

Shear = N tan(40.00)
Inter-Unit ShearShear = N tan(34.00) + 900.00

Calculated Reactions

For the "modified" design method, the back of the mass assumed to be vertical for calculation of resisting forces.
effective sliding length = 4.50 ft

$$Pa := 0.5H\cdot\left(\gamma\cdot H\cdot ka - 2c\cdot\sqrt{ka}\right) \qquad P_q := q\cdot H\cdot ka$$

$$Pa_h := Pa\cdot\cos(\delta) \qquad Pq_h := P_q\cdot\cos(\delta)$$

$$Pa_v := Pa\cdot\sin(\delta) \qquad Pq_v := P_q\cdot\sin(\delta)$$

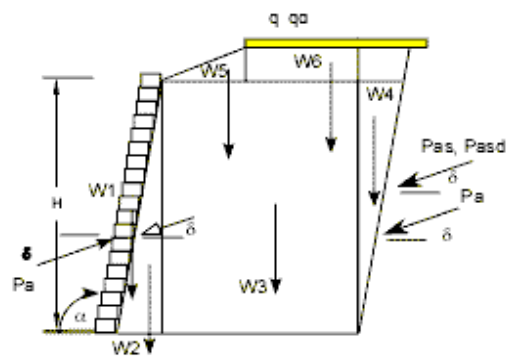

Reactions are:

Area	Force	Arm-x	Arm-y	Moment
W1	*840.00*	*[0.745]*	*3.500*	*625.58*
W2	*188.45*	*[1.326]*	*2.333*	*249.95*
W3	*2318.09*	*[2.995]*	*3.500*	*6942.10*
Pa_h	*837.76*	*4.500*	*[2.333]*	*-1954.77*
Sum V =	*3346.55*		*Sum Mr =*	*7817.63*
Sum H =	*837.76*		*Sum Mo =*	*-1954.77*

Calculate Sliding at Base

For Sliding, Vertical Force = W1+W2+W3+W4+W5+W6+qd	= 3347
The resisting force within the rein. mass , Rf_1	= N tan(34)
	= 2257
The resisting force at the foundation, Rf_2	= N tan(38) + (4.50 x 50.00)
	= 2840
The driving forces, Df, are the sum of the external earth pressures:	
Pa_h + Pql_h + Pqd_h	= 838
the Factor of Safety for Sliding is Rf_1/Df	= 2.69

Calculate Overturning:

Overturning moment: Mo = Sum Mo	= -1955
Resisting moment: Mr = Sum Mr	= 7818
Factor of Safety of Overturning: Mr/Mo	= 4.00

Calculate eccentricity at base: with Surcharge / without Surcharge
Sum Moments = 5863 / 5863
Sum Vertical = 3347/3347
Base Length = 4.50
e = 0.498 / 0.498

Calculate Ultimate Bearing based on shear:
where:

Nq = 48.93
Nc = 61.35
Ng = 78.02 (ref. Vesic(1973, 1975) eqns)
Qult = 33560 psf

Equivalent footing width, B' = L -2e = 3.50 / 3.50
Bearing pressure = sumV/B' = 955 psf / 955 psf [bearing is greatest without liveload]
Factor of Safety for bearing = Qult/bearing= 35.14

Calculate Tensions in Reinforcing:
The tensions in the reinforcing layer, and the assumed load at the connection,
is the vertical area supported by each respective layer, Sv.Column [7] is '2c sqrt(ka)'.

Table of Results ppf

[1]	[2]	[3]	[4]	[5]	[6]	[7]	[8]	[9]	[10]	[11]
Layer	Depth zi	h1	ka/rho	Pa	(Pas+Pasd)	c	(5+6)cos(d)-7	Ti	Tcl	Tsc
3	1.67	1.33	0.257/60	100	0	0	100	100	538	N/A
2	3.67	3.67	0.257/60	207	0	0	207	207	584	N/A
1	5.67	5.83	0.257/60	385	0	0	385	385	630	N/A

Calculate sliding on the reinforcing:

The shear value is the lessor of base-shear or inter-unit shear.

[1]	[2]	[3]	[4]	[5]	[6]	[7]	[8]	[9]	[10]	[11]	[12]
Layer	Depth zi	N	Li	Cds	τ	RF	ka	Pa	Pas+Pasd	DF	FS
3	*1.67*	*631*	*3.50*	*0.90*	*1035*	*1418*	*0.356*	*59*	*0*	*10*	*147.55*
2	*3.67*	*1360*	*3.50*	*0.90*	*1197*	*2022*	*0.356*	*287*	*0*	*178*	*11.38*
1	*5.67*	*2058*	*3.50*	*0.90*	*1359*	*2608*	*0.356*	*686*	*0*	*517*	*5.05*

Calculate pullout of each layer

The FoS (R*/S*) of pullout is calculated as the individual
layer pullout (Rf) divided by the tension (Df) in that layer.
The angle of the failure plane is: 28.00 degrees from vertical.

[1]	[2]	[3]	[4]	[5]	[6]	[7]	[8]
Layer	Depth zi	Le	SumV	Ci	POi	Ti	FS_PO
3	*1.67*	*1.04*	*190*	*0.90*	*231*	*100*	*2.30*
2	*3.67*	*1.96*	*791*	*0.90*	*960*	*207*	*4.63*
1	*5.67*	*2.88*	*1798*	*0.90*	*2183*	*385*	*5.68*

Check Shear & Bending at each layer

Bending on the top layer is the FOS of overturning of the Units
(Most surcharge loads need to be moved back from the face.)

[1]	*[2]*	*[3]*	*[4]*	*[5]*	*[6]*	*[7]*	*[8]*	*[9]*	
Layer	*Depth zi*	*Si*	*DM*	*Pv*	*RM*	*FS_b*	*DS*	*RS*	*FS_Sh*
3	*1.67*	*1.67*	*22*	*200*	*112*	*5.12*	*39*	*1035*	*26.37*
2	*3.67*	*2.00*	*42*	*320*	*259*	*6.12*	*89*	*1197*	*13.38*
1	*5.67*	*2.00*	*71*	*560*	*403*	*5.70*	*146*	*1359*	*9.31*

ATTACHMENT B
CROSS-SECTION DRAWING

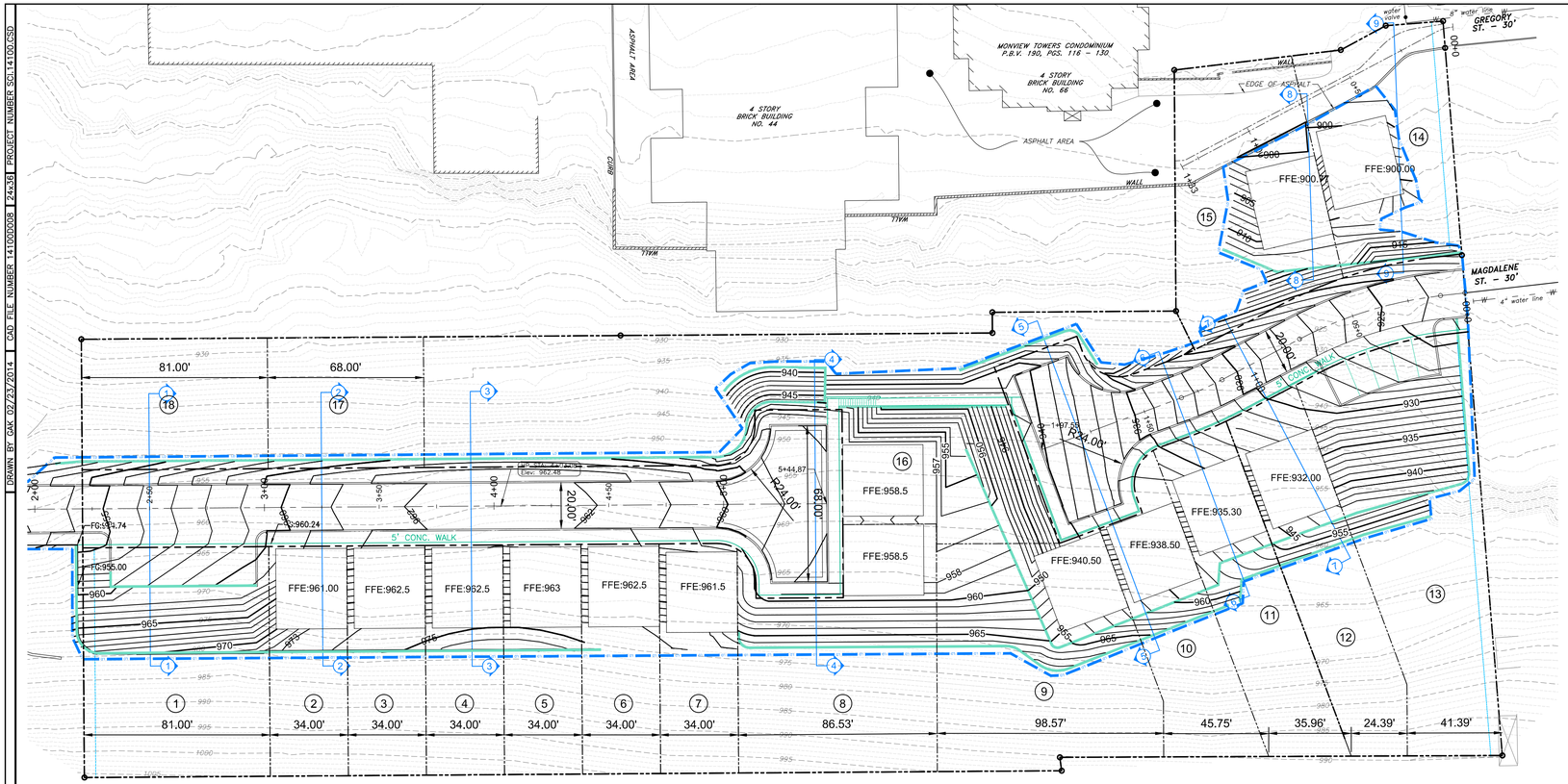

PLAN VIEW - 1:30

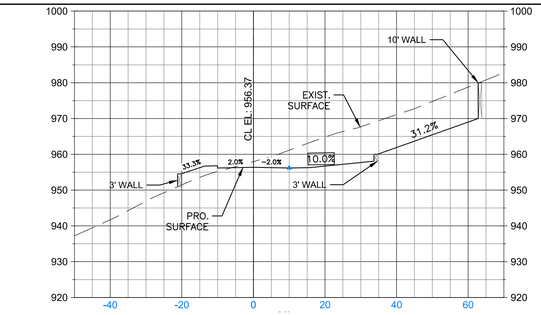

① HACKSTOWN STREET EXT.
STA. 2+50

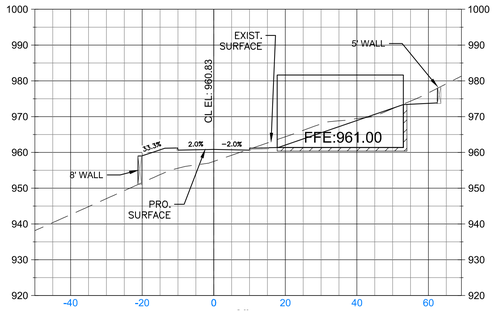

② HACKSTOWN STREET EXT.
STA. 3+25

SECTION VIEW - 1:20

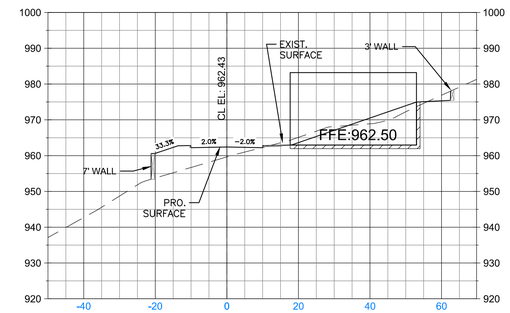

③ HACKSTOWN STREET EXT.
STA. 3+90

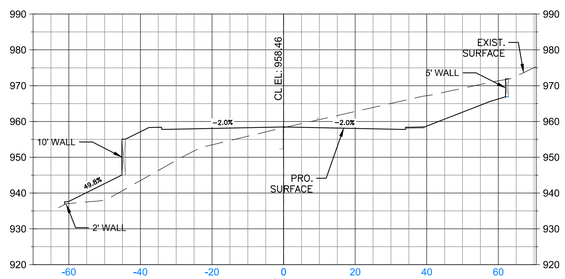

④ HACKSTOWN STREET EXT.
STA. 4+65

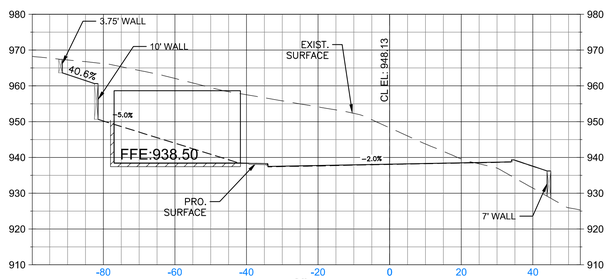

⑤ MAGDALENE STREET EXT.
STA. 1+80

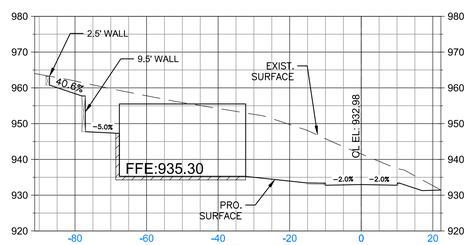

⑥ MAGDALENE STREET EXT.
STA. 1+35

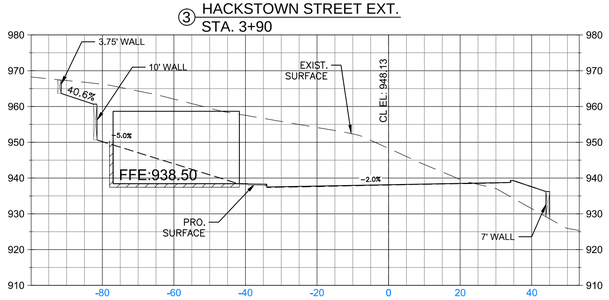

⑦ MAGDALENE STREET EXT.
STA. 1+80

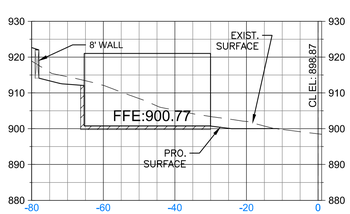

⑧ GREGORY STREET EXT.
0+69

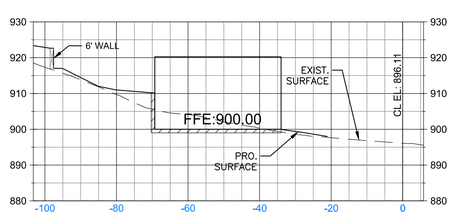

⑨ GREGORY STREET EXT.
STA. 0+22

DRAWN BY: GAK 02/25/2014 | CAD FILE NUMBER: 141000008 | 24x36 | PROJECT NUMBER: SCI.14100.CSD

ATTACHMENTS

NO.	REVISION DESCRIPTION	DATE	APPROVED
5.	GENERAL REVISIONS	3/18/16	
4.	GENERAL REVISIONS	10/28/15	

CHECKED BY: - APPROVED BY: -

PREPARED BY:
KU Resources, Inc.
22 South Linden Street
Duquesne, PA 15110
412.469.9331
412.469.9336 fax
www.kuresources.com

PREPARED FOR:
SYNERGY CAPITAL, INC.
1014 PERRY HIGHWAY, SUITE 100
PITTSBURGH, PA 15237

PROJECT:
Villas at Winter Park
CITY OF PITTSBURGH, COUNTY OF ALLEGHENY
PENNSYLVANIA

DRAWING TITLE:
Preliminary Plan & Cross Sections

SHEET NO.
C-405