Division of Development Administration and Review
City of Pittsburgh, Department of City Planning
200 Ross Street, Third Floor
Pittsburgh, Pennsylvania 15219

Historic Review Commission of Pittsburgh

200 Ross Street, First Floor Hearing Room
June 4, 2014

AGENDA

(Vacant), *Chairman*
Ernie Hogan, *Acting Chairman*
Ray Gastil, *Acting Director of Planning*
Maura Kennedy, *Secretary, Acting Chief BBI*
Linda McClellan
Joe Serrao
(Vacant)

- **12:30 PM CALL TO ORDER**
- **12:30 PM INTERNAL BUSINESS**

Old Business

New Business

- Approval of the minutes from the May 2014 hearings
- Certificates of Appropriateness Report – May
- Applications for a Certificate of Economic Hardship – None

Upcoming Demolitions, no action at this time

- None

- **1:00 PM HEARING & ACTION**

1. ***Deutschtown Historic District***
   408 Cedar Avenue
   Griffy LLC, owner
   Jonathan Huck, applicant
   Façade renovations and construction of ADA ramp

2. ***East Carson Street Historic District***
   1500 Bingham Street
   Ravi Kondaveeti, owner
   JMAC Architects, applicant
   Demolition and new construction

3. ***East Carson Street Historic District***
   1514 East Carson Street
   Mario's Group, owner
   Americo Construction, applicant
   Replacement of windows with operable system

4. ***East Carson Street Historic District***
   2000 E. Carson Street
   5 Oaks Development, owner
   Classic Deck Impressions, applicant
   Construction of rooftop deck

5. ***Market Square Historic District***
   25 Market Square
   Nick Nicholas, owner
   Sipp and Tepe Architects LLC, applicant
   Construction of rooftop deck and railing

- **DEMOLITIONS**

1. **Manchester Historic District**
   1215 W. North Avenue
   Madeline Mitchum, owner
   Bureau of Building Inspection, applicant
   Demolition of house and garage

2. **Manchester Historic District**
   1217 W. North Avenue
   Robert Lee Bulls, owner
   Bureau of Building Inspection, applicant
   Demolition of house and garage

3. **Manchester Historic District**
   1219 W. North Avenue
   Daryl Troha and Natalia Kujdych, owners
   Bureau of Building Inspection, applicant
   Demolition of house

4. **Manchester Historic District**
   1221 W. North Avenue
   Natalia Kujdych, owner
   Bureau of Building Inspection, applicant
   Demolition of house and garage

- **NOMINATIONS**
- **DIRECTOR'S REPORT**
- **ADJOURNMENT**

The John Robin Civic Building, located at 200 Ross St. downtown, is wheelchair accessible. This meeting is open to all members of the public. INTERPRETERS FOR THE HEARING IMPAIRED WILL BE PROVIDED WITH FOUR DAYS NOTIFICATION BY CONTACTING RICHARD MERITZER AT 412-255-2102.

Please contact Sarah Quinn with questions and comments: 412-255-2243
sarah.quinn@city.pittsburgh.pa.us

Division of Development Administration and Review
City of Pittsburgh, Department of City Planning
200 Ross Street, Third Floor
Pittsburgh, Pennsylvania 15219

HISTORIC REVIEW COMMISSION OF PITTSBURGH
Application for a Certificate of Appropriateness

DEADLINE:
Completed applications must be received at least 13 working days prior to the HRC hearing, when a hearing is required

FEE SCHEDULE:
See attached. Please make check payable to: *Treasurer, City of Pittsburgh.*

STAFF USE ONLY:

DATE RECEIVED: _____

LOT AND BLOCK NUMBER: _____

WARD: _____

FEE PAID: _____

ADDRESS OF PROPERTY:
408 CEDAR AVE.
PITTSBURGH PA 15212

DISTRICT:
DEUTSCHTOWN HISTORIC
DISTRICT 1 - HARRIS

OWNER:

NAME: GRIFFY LLC
ADDRESS: 408 CEDAR AVE
PITTSBURGH PA 15212
PHONE: 412.551.4661
EMAIL: MAG@GMWPCLAW.COM

APPLICANT:

NAME: JONATHAN HUCK
ADDRESS: NORTHSIDE LEADERSHIP CONFERENCE
FOUR ALLEGHENY CENTER - SUITE 601
PITTSBURGH PA 15212
PHONE: 412.330.2556
EMAIL: JON@PITTSBURGHNORTHSIDE.COM

REQUIRED ATTACHMENTS:

☒ Drawings ☒ Photographs ☐ Renderings ☒ Site Plan ☒ Other

DETAILED DESCRIPTION OF PROPOSED PROJECT:

EXTERIOR RENOVATIONS TO INCLUDE REPLACING W-KIND STORM WINDOWS, PAINTING WOOD TRIM TO MATCH COLOR OF STORM WINDOWS REPLACING EXT. LIGHT FIXTURES W/ PERIOD-SENSITIVE SELECTIONS, AND POSSIBLY INSTALLING ADA-COMPLIANT RAMP

SIGNATURES:

OWNER: Griffith, McCague & Wallace, PC
By: [signature], Pres DATE: 5/14/14

APPLICANT: [signature] DATE: 5/13/14

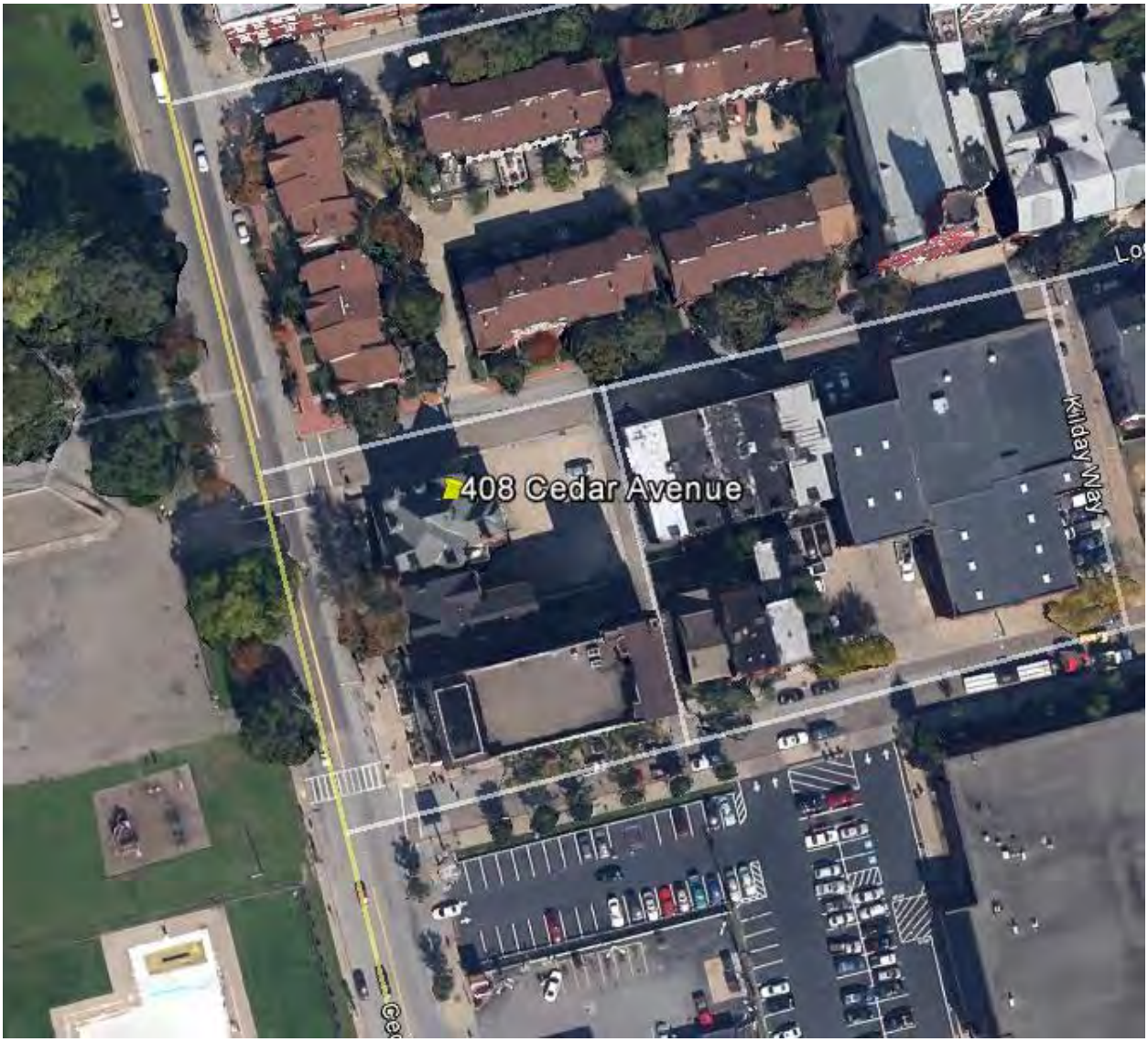
408 Cedar Avenue
Kilday Way

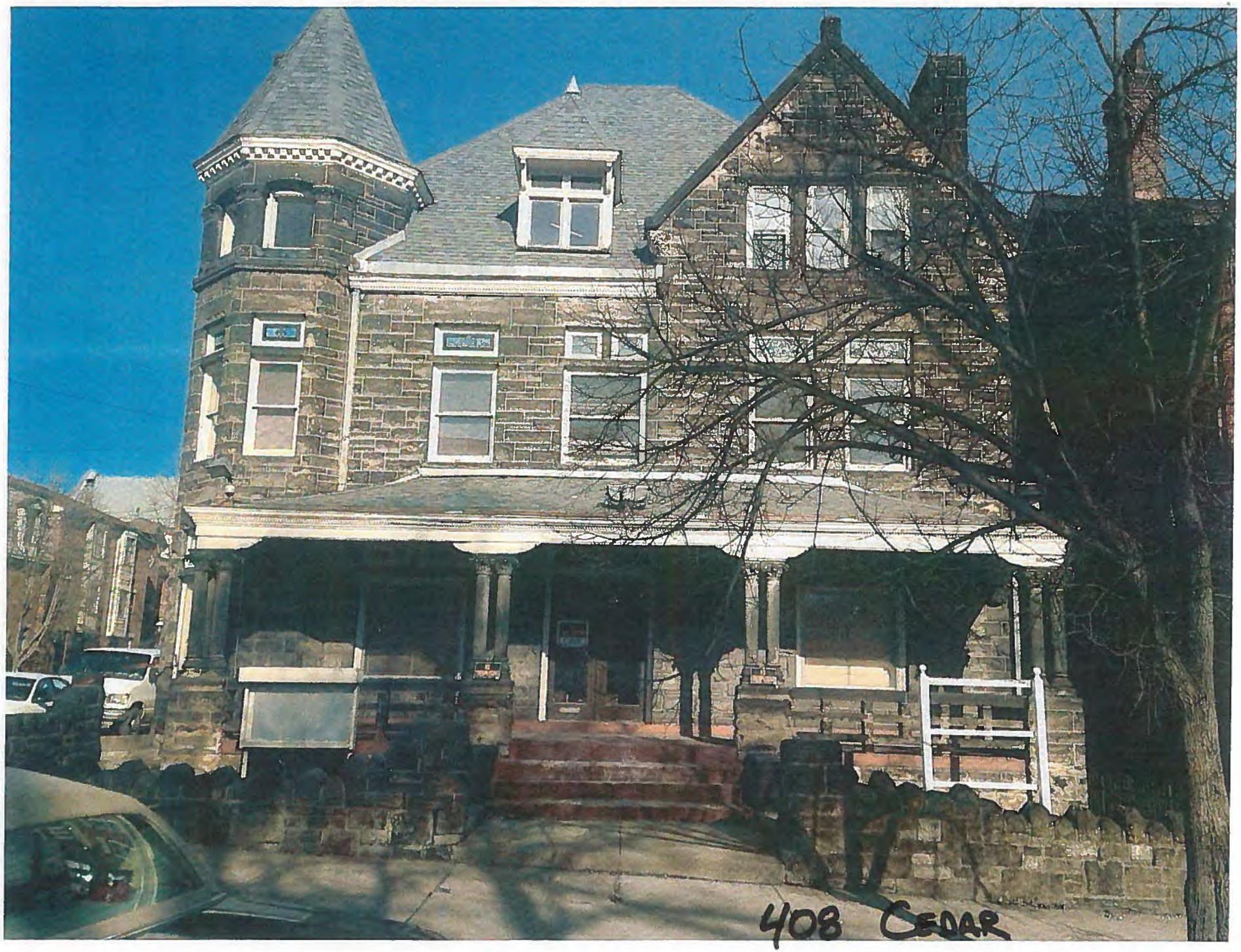
408 CEDAR

LOCKHART ST.

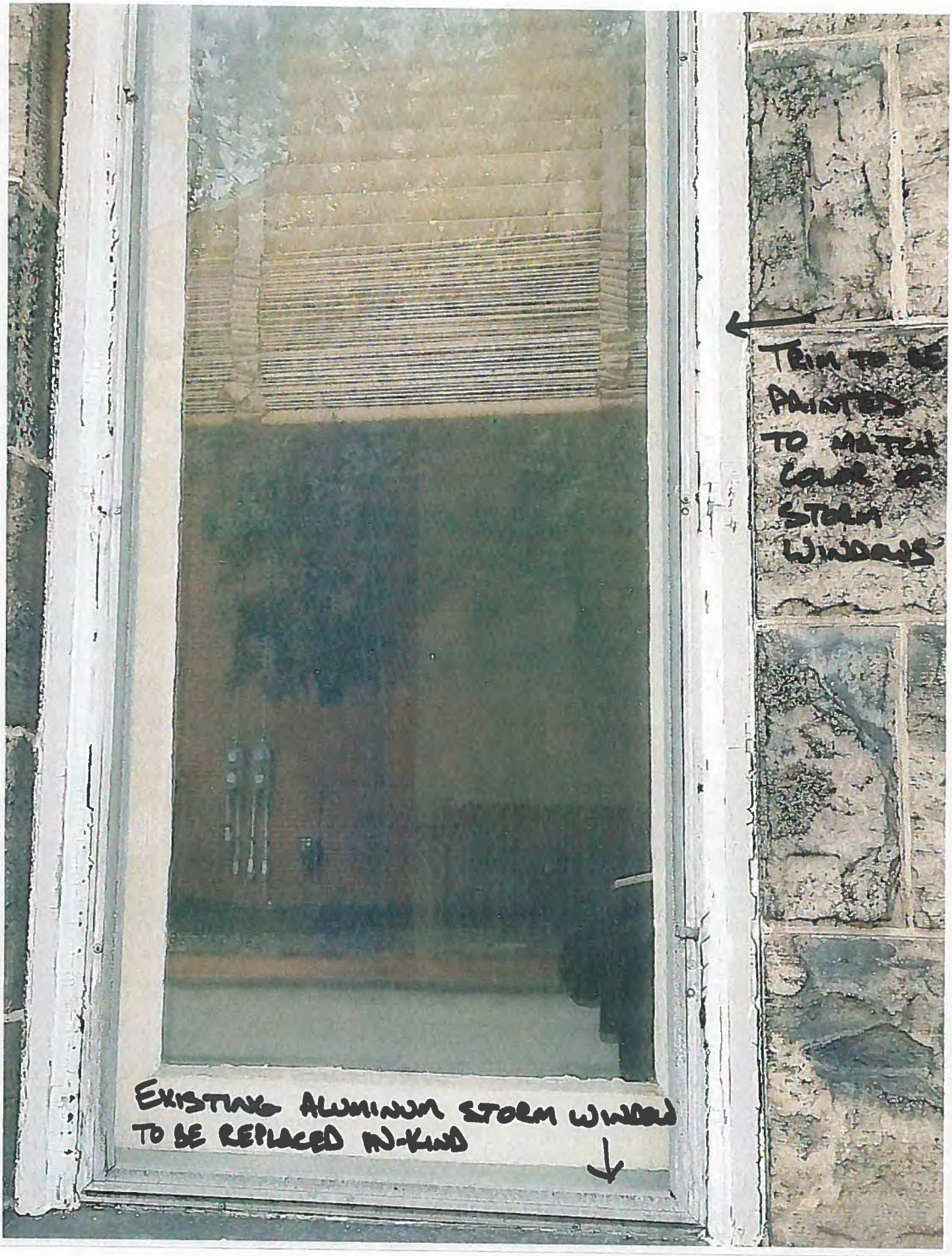
TRIM TO BE PAINTED TO MATCH COLOR OF STORM WINDOWS
EXISTING ALUMINUM STORM WINDOW TO BE REPLACED IN-KIND

LIGHT FIXTURES TO
BE REMOVED W/
POND-SENSITIVE
FIXTURES
NO
TRESPASSING
VIOLATORS WILL
BE PROSECUTED

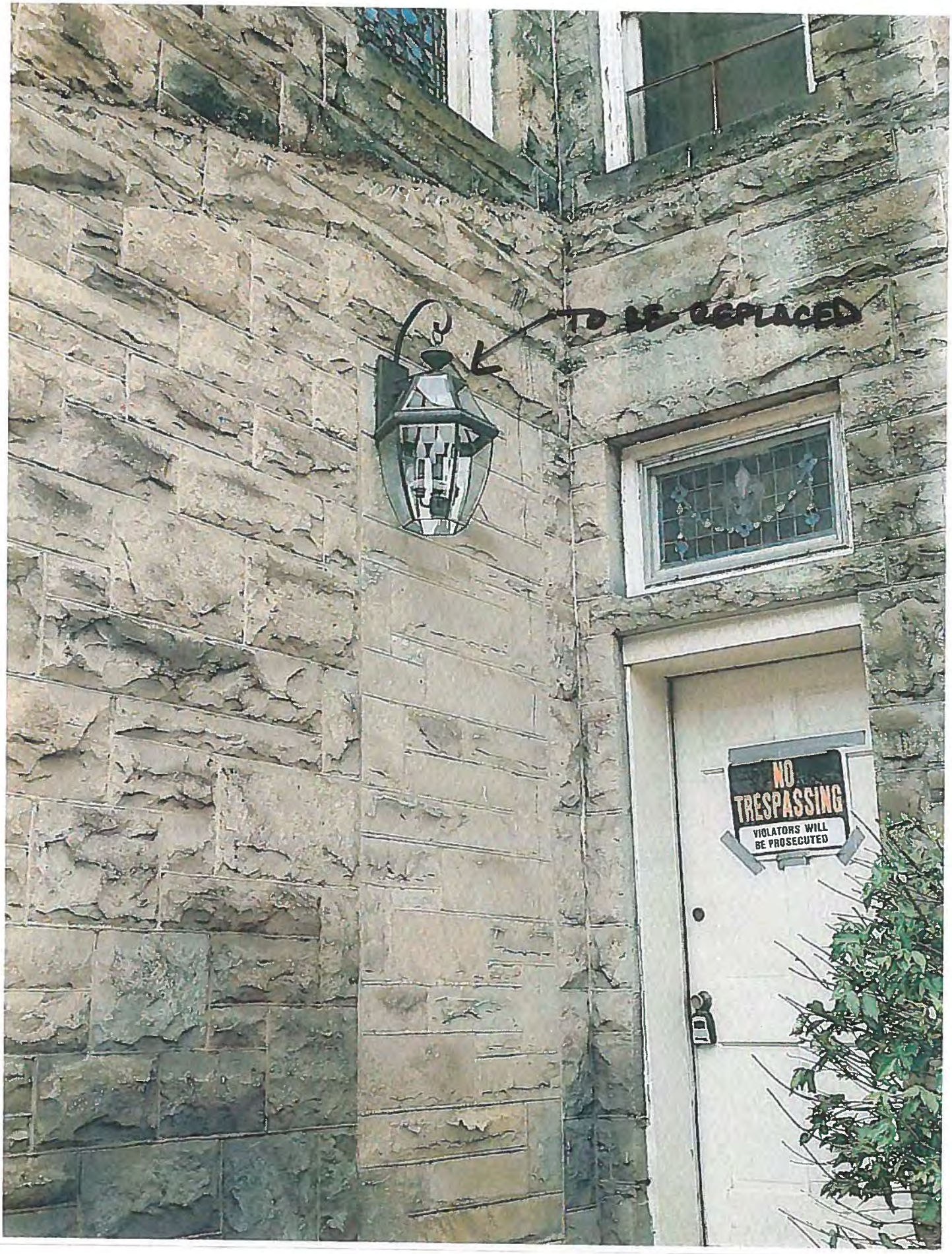
TO BE REPLACED
NO TRESPASSING
VIOLATORS WILL BE PROSECUTED

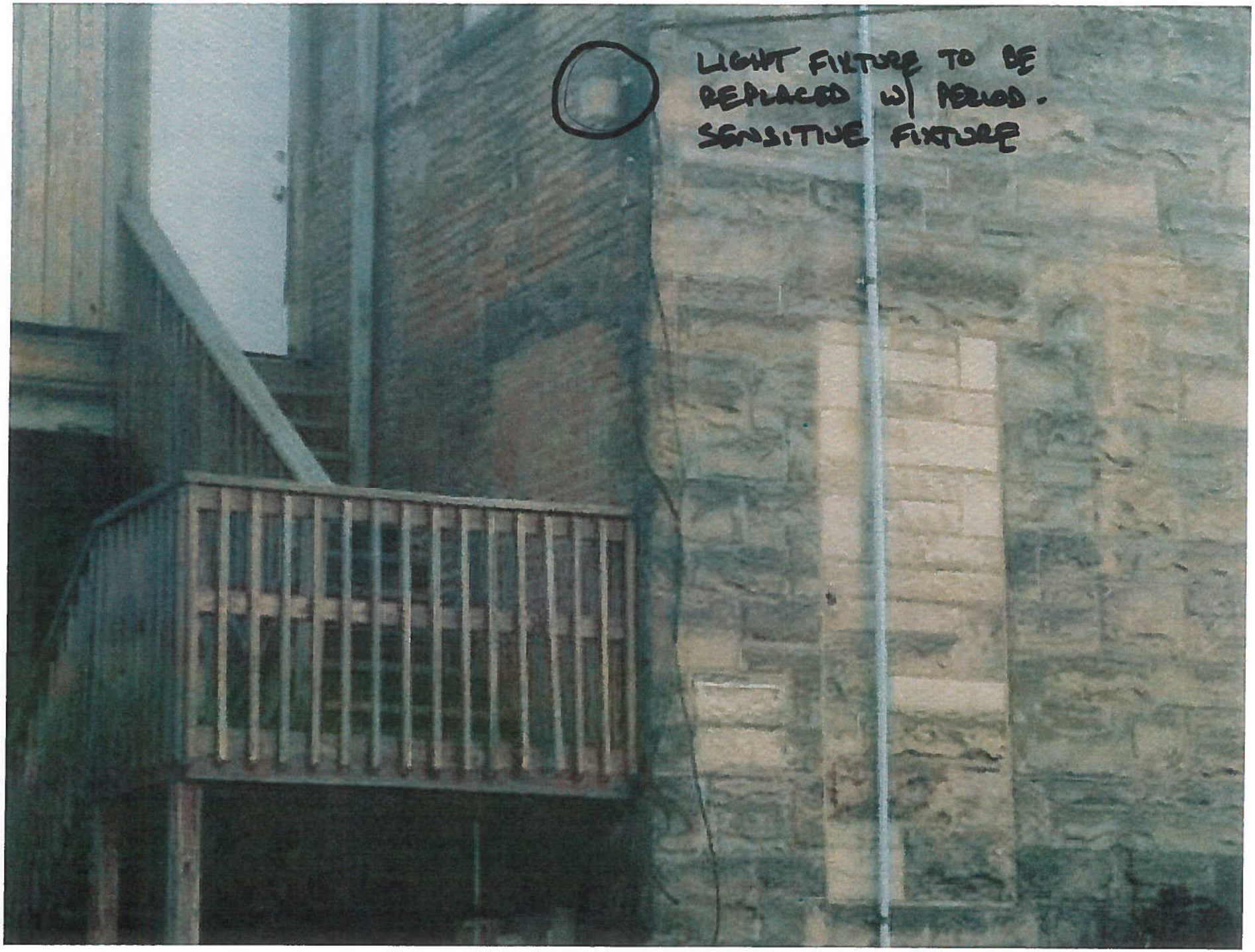
LIGHT FIXTURE TO BE
REPLACED W/ PERIOD.
SENSITIVE FIXTURE

5 DAYS ONLY!
SAVE 40%
VISUAL COMFORT
OPEN BOX SALE

THE GREAT OUTDOORS BY MINKA LAURISTON MANOR 1 LIGHT WALL BRACKET IN OIL RUBBED BRONZE W/GOLD HIGHLIGHTS 72393-143C

Sku # 72393-143C

Comes in 3 or 4 sizes

Zoom Image | Watch Video | Spec Sheet

IN STOCK
100+
05/12/2014

$165.90 per each

Listed Price ~~$248.85~~
You Save $82.95 (33.33%)

Quantity 1 more than 100?

add to shopping cart

Add to List or Make an Offer

Return Policy | Shipping Policy | 110% Price Match

RELATED PRODUCTS

Minka-Lavery 72396-143C
The Great Outdoors by Minka Lauriston Ma...
$159.90

double door

Minka-Lavery 72391-143C
The Great Outdoors by Minka Lauriston Ma...
$95.90

Minka-Lavery 72392-143C
The Great Outdoors by Minka Lauriston Ma...
$119.90

These products come in a variety of collections and categories..

See Lauriston Manor collection »
See Outdoor Wall Lights »

Product Information | General Information | Brand Information | Catalog(s) | Reviews | Questions

GENERAL INFORMATION

The Great Outdoors by Minka Lauriston Manor 1 Light Wall Bracket in Oil Rubbed Bronze w/Gold Highlights 72393-143C

about this product? Ask us! Live Chat | Submit a Question

Check the right-hand bar or call our dedicated Sales Team for similar items and additional options not pictured.

Brand Information

- Brand: Minka-Lavery
- Collection: Lauriston Manor
- SKU: 72393-143C

Dimensions and Weight

- Width: 9.00 in.
- Height: 15.75 in.
- Extension/Depth: 11.00 in.
- Backplate/Canopy Width: 0.00 in.
- Backplate/Canopy Length: 0.00 in.

Design Information

- Category: Outdoor Wall Lights
- Finish: Oil Rubbed Bronze w/Gold Highlights
- Glass: Clear Seeded

Bulb Information

SMALL - DOUBLE DOOR
LARGE - INSIDE

- Bulbs Included: No
- Bulb Category: LED
- Primary Bulb(s): 1 x 10 watts LED

PROFESSIONALS!

Get the most out of Lighting New York! Apply for Trade Pricing Discounts Today!

Apply Now

BUSINESS HOURS

Lighting New York is standing by your side seven days a week!

Sales Representatives -
Mon - Fri 8am to Midnight EST
Sat & Sun 9am to Midnight EST

Customer Service -
Mon - Thu 9am to 7pm EST
Fri 9am to 5:30pm EST

Call Now! 866.344.3875

RECENTLY VIEWED

ADA-COMPLIANT RAMP'S POSSIBLE LOCATION FOR INSTALLATION @ REAR OF PROPERTY

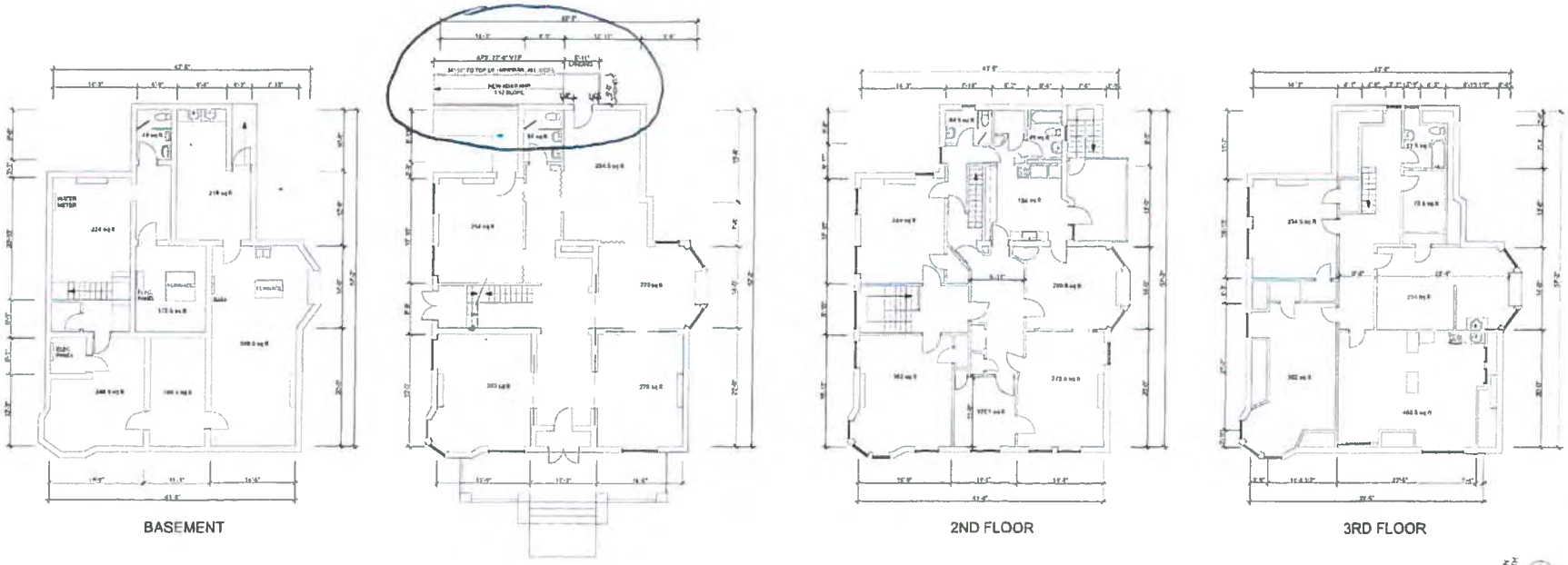

408 CEDAR AVENUE EXISTING CONDITIONS

DRAWN BY: D.MCNAMARA
FOR: NORTHSIDE LEADERSHIP CONFERENCE
DATE: OCTOBER 6TH 2011
SCALE: 1/8" = 1'-0"
SHEET SIZE: 24" X 36"

NOTE:
ALL DIMENSIONS TO BE VERIFIED IN FIELD
SOME ASSUMPTIONS ARE MADE DUE TO UNFORESEEN EXISTING CONDITIONS

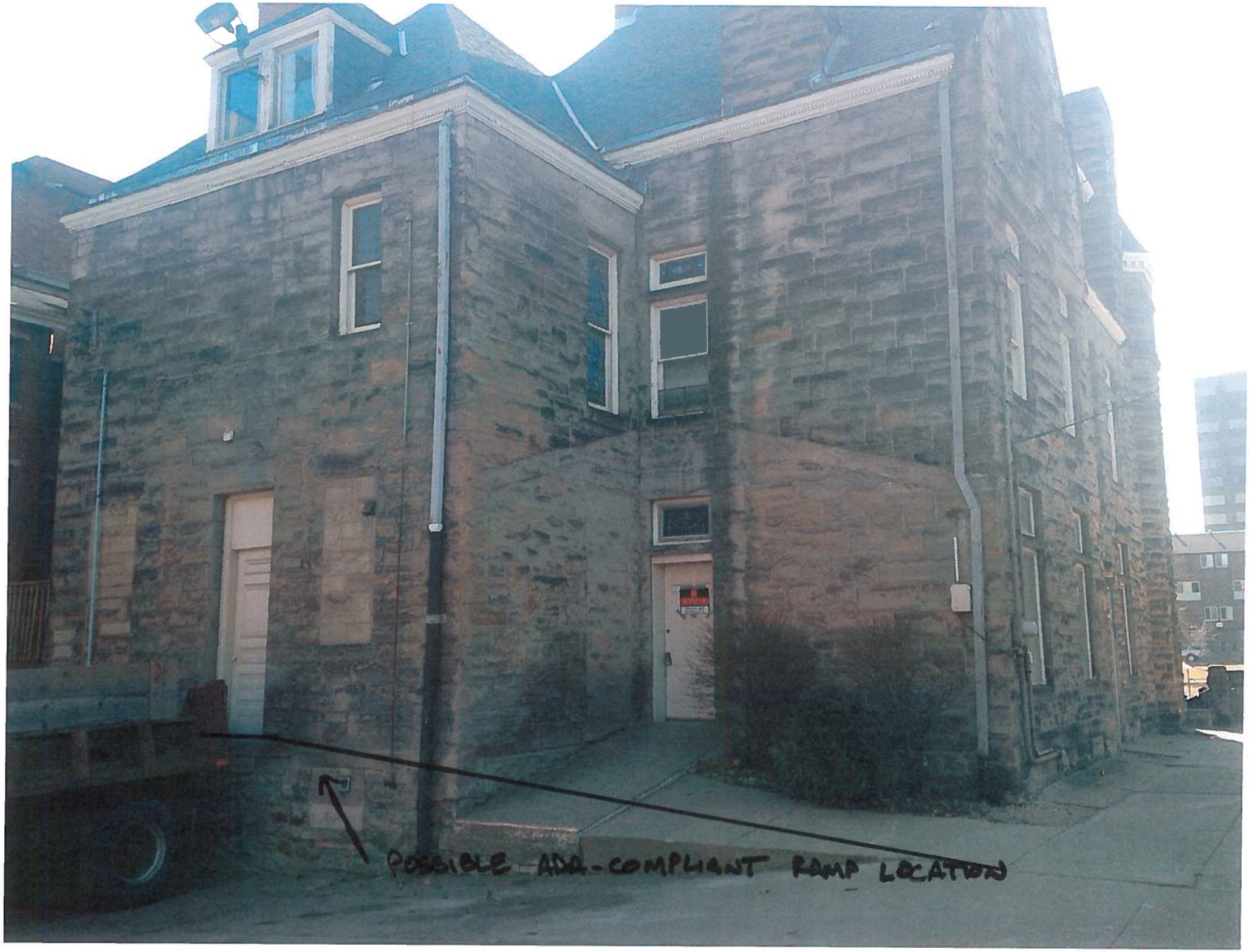
POSSIBLE ADA-COMPLIANT RAMP LOCATION

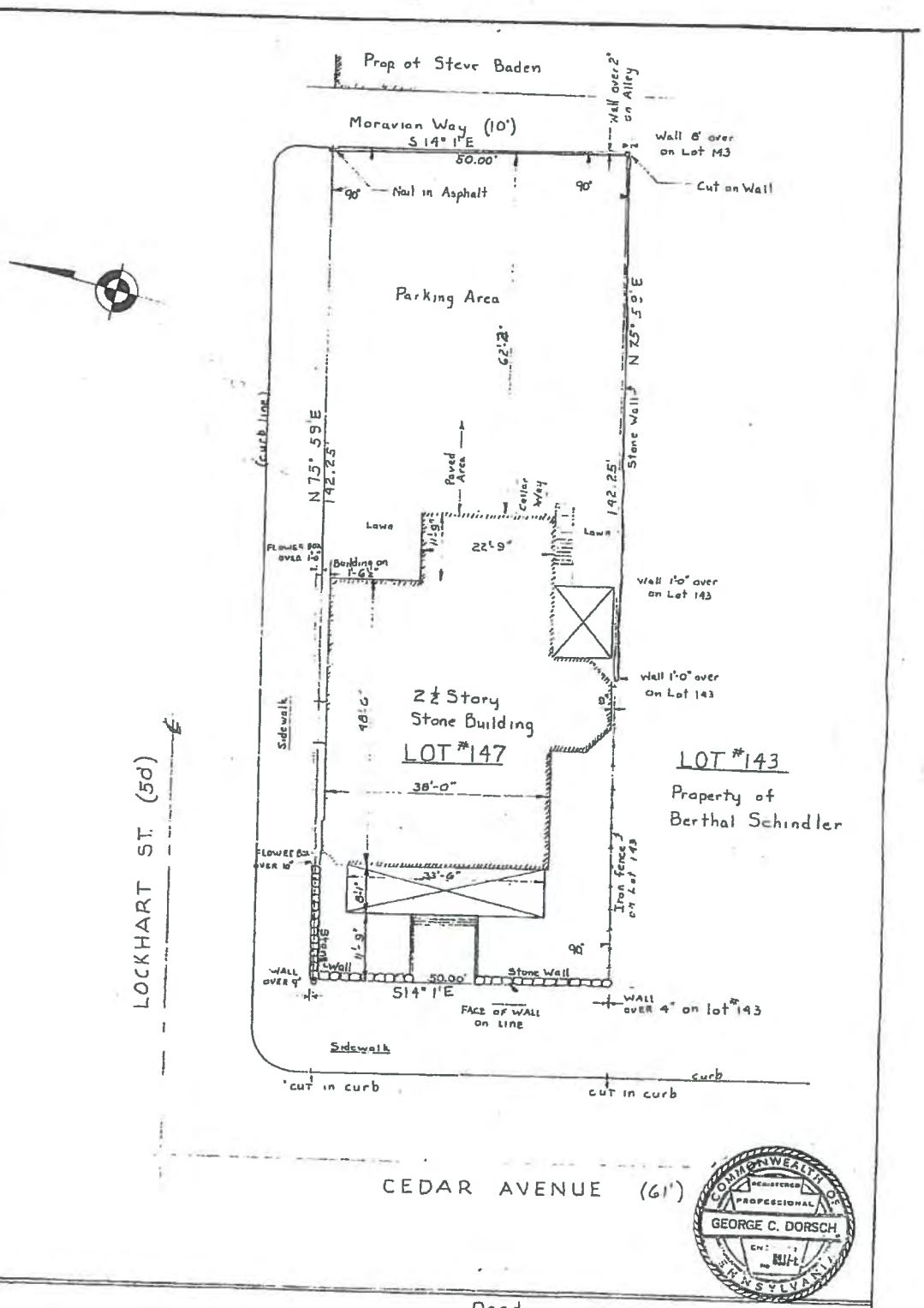

PLAN OF LOT - NO. 147 - Block 8-D, Deed Recorded - Volume 4000 Page 297

SITUATE IN THE 23rd. WARD, City of Pittsburgh Commonwealth of Penna.

SURVEYED FOR - WALTER J. SPERLING

GEORGE C. DORSCH

Registered Engineer Pgh. (2) Pa

DATE - Dec. 6, 1963

SCALE - 1" = 16'-0"

Division of Development Administration and Review
City of Pittsburgh, Department of City Planning
200 Ross Street, Third Floor
Pittsburgh, Pennsylvania 15219

HISTORIC REVIEW COMMISSION OF PITTSBURGH
Application for a Certificate of Appropriateness

DEADLINE:
Completed applications must be received at least 13 working days prior to the HRC hearing, when a hearing is required

FEE SCHEDULE:
See attached. Please make check payable to: *Treasurer, City of Pittsburgh.*

STAFF USE ONLY:
DATE RECEIVED: 4/17/14
LOT AND BLOCK NUMBER: 3-H-99
WARD: 17th
FEE PAID: yes

ADDRESS OF PROPERTY:
1500 Bingham Street
Pittsburgh, PA 15203

DISTRICT:
E. Carson

OWNER:
NAME: Ravi Kondaveeti
ADDRESS: 222 5th Ave, Apt 320
Pittsburgh, PA 15222
PHONE: 814.602.9728
EMAIL: kdyakich@gmail.com

Katie Yakich:

APPLICANT:
NAME: JMAC Architects : Jim McMullen
ADDRESS: 1273 Washington Pike
Bridgeville, PA 15017
PHONE: 412-708-6742
EMAIL: jmcmullen@jmac-architects.com

REQUIRED ATTACHMENTS:

☐ Drawings ☐ Photographs ☐ Renderings ☐ Site Plan ☐ Other

DETAILED DESCRIPTION OF PROPOSED PROJECT:

Demolition and new construction of a 3-story single family dwelling with integral 3 car garage

SIGNATURES:

OWNER: Ravi Kondaveeti DATE: 4/15/14

APPLICANT: J McMullen DATE: 4-15-14

1500 Bingham Street
S 15th St
S 16th St
E Carson St
Patterson Way

JMAC ARCHITECTS

1273 Washington Pike
Bridgeville, PA 15017

t. 412.257.9010
f. 412.257.3085

1500 Bingham St. Apartments

South Side

Pittsburgh, PA 15203

15th St Elevation

04.09.2014

JMAC ARCHITECTS
1273 Washington Pike
Bridgeville, PA 15017
t. 412.257.9010
f. 412.257.3085

1500 Bingham St. Apartments

South Side

Pittsburgh, PA 15203

Bingham St Elevation

04.09.2014

JMAC ARCHITECTS

1273 Washington Pike
Bridgeville, PA 15017

t. 412.257.9010
f. 412.257.3085

1500 Bingham St. Apartments

South Side Pittsburgh, PA 15203

15th Street View

04.09.2014

1500 Bingham Apartments

1500 Bingham St
South Side, Pgh PA 15203

Issued for Review - 04.08.2014

Drawing List

Sheet No.	Drawing Title	Issued for Demolition Permit 12.21.2013	Issued for Design Review 04.24.2013	Issued for Pricing 06.04.2013	
A-404	Longitudinal Section				
A-601	Wall Sections				
A-810	Miscellaneous Details				
M-100	Basement Mechanical Plan				
M-101	First Floor Mechanical Plan				
M-102	Second Floor Mechanical Plan				
M-103	Third Floor Mechanical Plan				
M-104	Mezzanine Mechanical Plan				
M-105	Roof Mechanical Plan				
Architecture					
A-000	Cover Sheet		X	X	
A-001	FAR Calculations		X	X	
A-002	Code Summary / Abbreviations				
D-100	Basement Demolition Plan	X	X	X	
D-101	First Floor Demolition Plan	X	X	X	
D-102	Second Floor Demolition Plan	X	X	X	
D-103	Roof Demolition Plan	X	X	X	
D-200	15th Street Demolition Elevation	X	X	X	
D-201	Bingham Street Demolition Elevation	X	X	X	

Drawing List

Sheet No.	Drawing Title	Issued for Demolition Permit 12.21.2013	Issued for Design Review 04.24.2013	Issued for Pricing 06.04.2013	
A-100	Basement Plan		X	X	
A-101	First Floor Plan		X	X	
A-102	Second Floor Plan		X	X	
A-103	Third Floor Plan		X	X	
A-104	Mezzanine Plan		X	X	
A-105	Roof Plan		X	X	
A-200	15th Street Elevation		X	X	
A-201	Bingham Street Elevation		X	X	
A-400	Building Section		X	X	
A-401	Building Section		X	X	
A-402	Building Section		X	X	
A-403	Building Section		X	X	
A-500	Enlarged Plans & Elevations			X	
A-501	Enlarged Plans & Elevations			X	
A-502	Enlarged Living Room Elevations			X	
A-503	Enlarged Master Bedroom Elevations				
A-504	Enlarged Apartment Plans & Elevations				
A-600	Wall Sections		X	X	
A-800	Details		X	X	
A-801	Details		X	X	
A-802	Details		X	X	
A-901	Partition Types / Finish Schedule				
Structural					
S-100	Structural Basement Plan				
S-101	Structural First Floor Plan				
S-102	Structural Second Floor Plan				
S-103	Structural Third Floor Plan				
S-104	Structural Mezzanine Plan				
S-105	Structural Roof Plan				

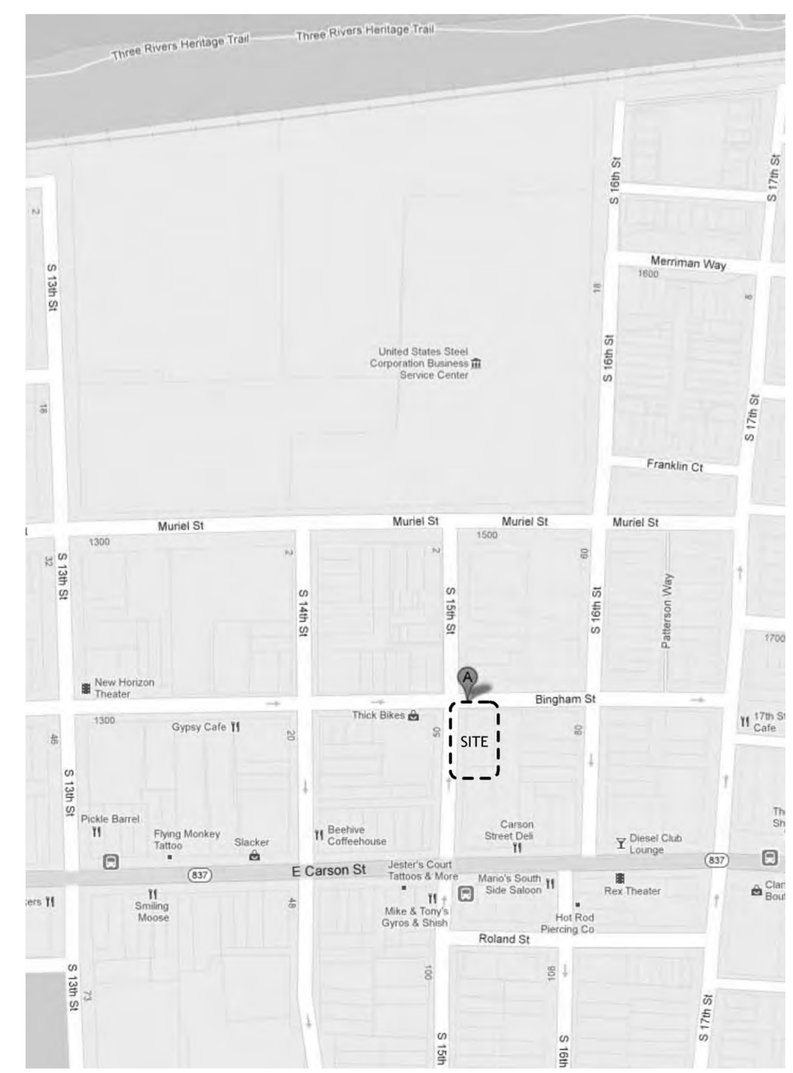

Site Location Map

NTS

JMAC ARCHITECTS

1273 Washington Pike
Bridgeville, PA 15017

t. 412.257.9010
f. 412.257.3085

ISSUE:

Issued for Review
04.08.2014

PROJECT:

1500 Bingham St. Apartments

South Side
Pittsburgh, PA 15203

12-004

THESE DRAWINGS ARE FOR REVIEW OF DESIGN AND SCOPE DESCRIPTION ONLY. NO REPRESENTATION IS MADE TO THE ACCURACY OF THE DRAWINGS WITH RESPECT TO EXISTING DIMENSIONS OR CONDITIONS. ALL CONSULTANTS AND CONTRACTORS MUST VERIFY ANY AND ALL DIMENSIONS AND CONDITIONS WHICH ARE CRITICAL TO THEIR WORK.

No.	Issue Date	Project Status
2.	06.04.2013	Issued for Pricing
1.	04.24.2013	Issued for Design Review

Cover Sheet

1500 Bingham St. Apartments
3/16" = 1'-0"

A-000

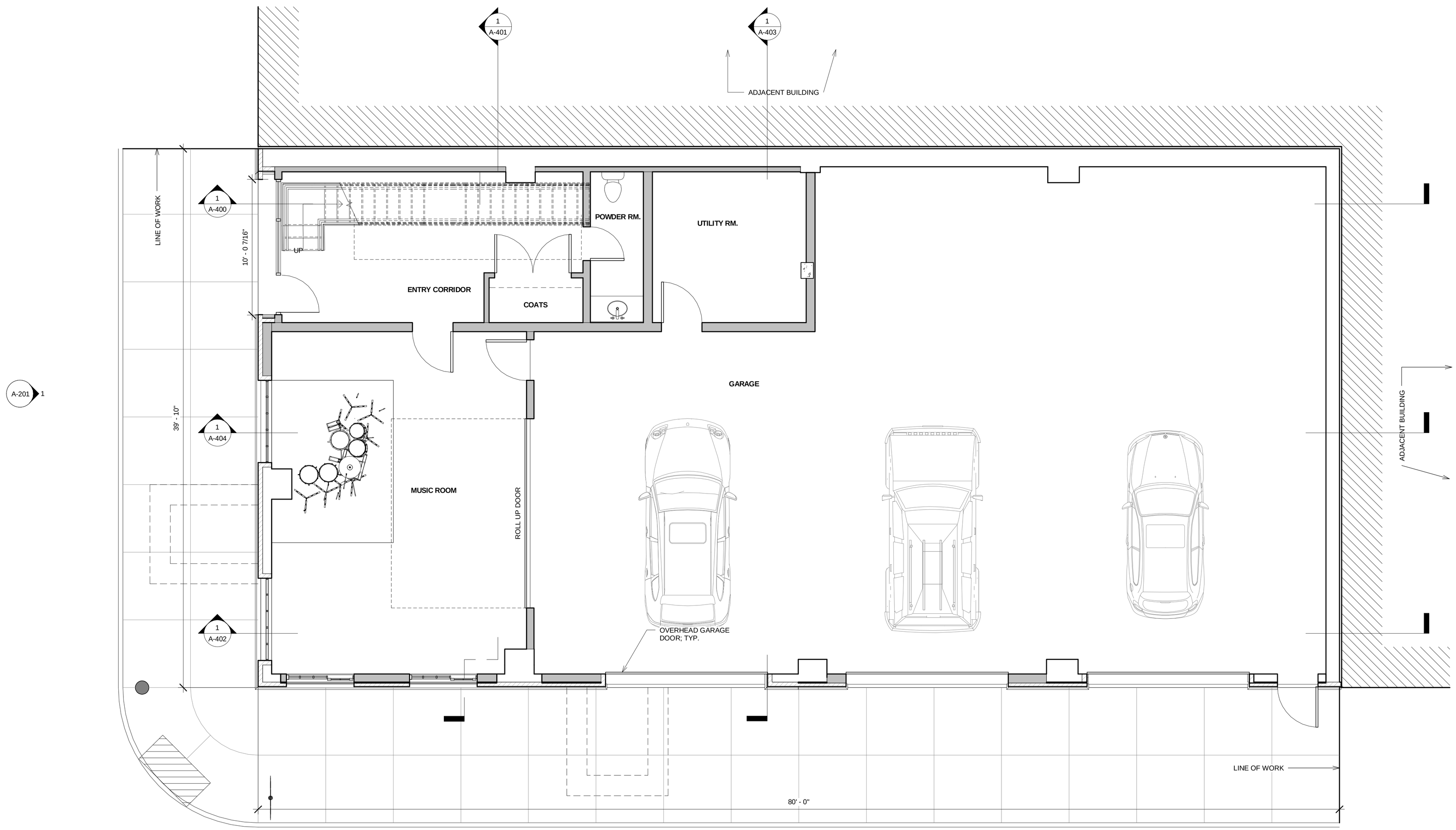

GROSS AREA: 3178 SQ. FT.
FAR: 248 SQ.FT.

1
A-200

1 First Floor Plan
1/4" = 1'-0"

JMAC ARCHITECTS
1273 Washington Pike
Bridgeville, PA 15017
t. 412.257.9010
f. 412.257.3085

ISSUE:

Issued for Review
04.08.2014

PROJECT:

1500 Bingham St. Apartments

South Side
Pittsburgh, PA 15203

12-004

THESE DRAWINGS ARE FOR REVIEW OF DESIGN AND SCOPE DESCRIPTION ONLY. NO REPRESENTATION IS MADE TO THE ACCURACY OF THE DRAWINGS WITH RESPECT TO EXISTING DIMENSIONS OR CONDITIONS. ALL CONSULTANTS AND CONTRACTORS MUST VERIFY ANY AND ALL DIMENSIONS AND CONDITIONS WHICH ARE CRITICAL TO THEIR WORK.

No.	Issue Date	Project Status

First Floor Plan

1500 Bingham St. Apartments
1/4" = 1'-0"

A-101

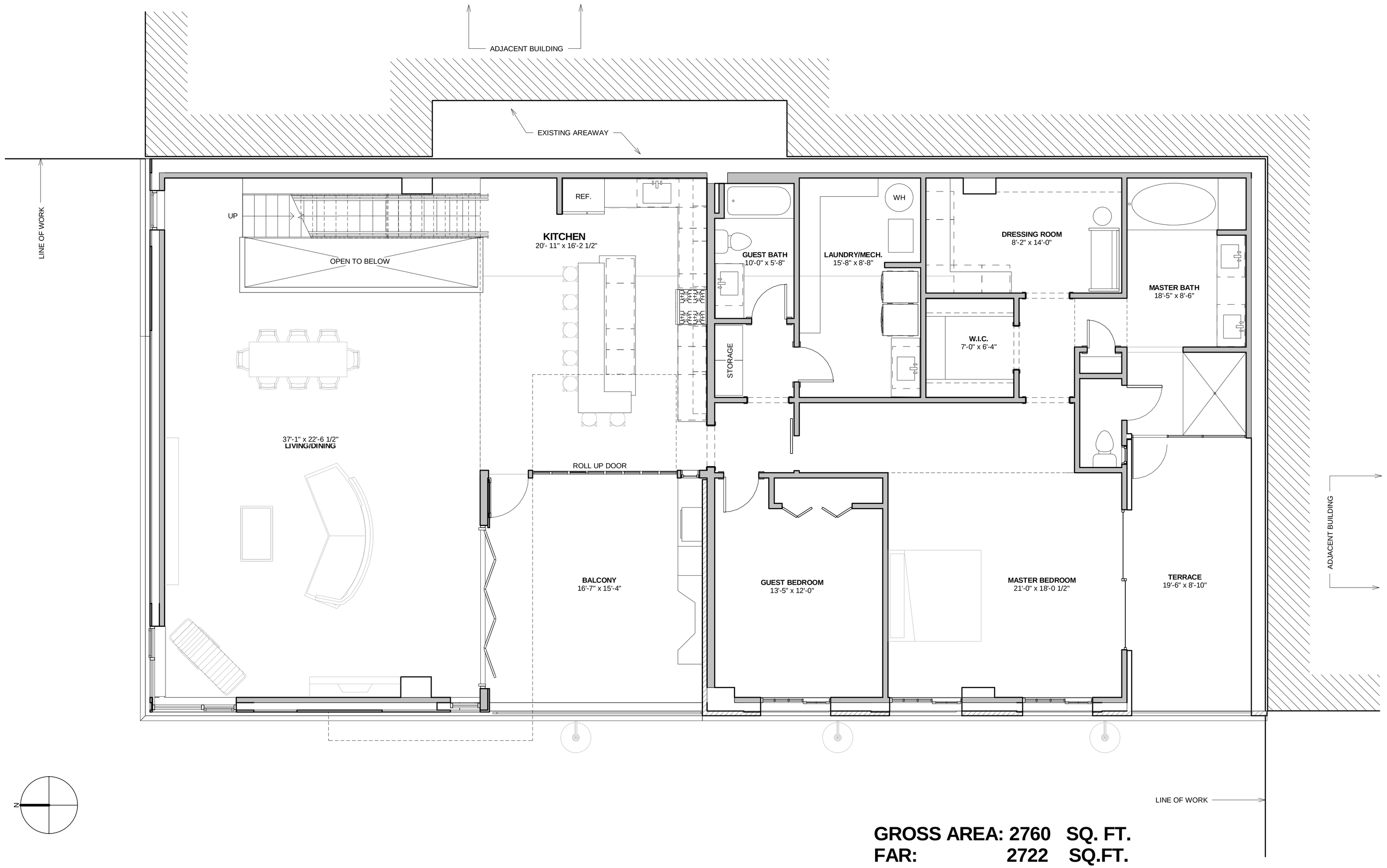

GROSS AREA: 2760 SQ. FT.
FAR: 2722 SQ.FT.

1 Second Floor Plan
1/4" = 1'-0"

JMAC ARCHITECTS
1273 Washington Pike
Bridgeville, PA 15017
t. 412.257.9010
f. 412.257.3085

ISSUE:

Issued for Review
04.08.2014

PROJECT:

1500 Bingham St. Apartments

South Side
Pittsburgh, PA 15203

12-004

THESE DRAWINGS ARE FOR REVIEW OF DESIGN AND SCOPE DESCRIPTION ONLY. NO REPRESENTATION IS MADE TO THE ACCURACY OF THE DRAWINGS WITH RESPECT TO EXISTING DIMENSIONS OR CONDITIONS. ALL CONSULTANTS AND CONTRACTORS MUST VERIFY ANY AND ALL DIMENSIONS AND CONDITIONS WHICH ARE CRITICAL TO THEIR WORK.

No.	Issue Date	Project Status

Second Floor Plan

1500 Bingham St. Apartments
1/4" = 1'-0"

A-102

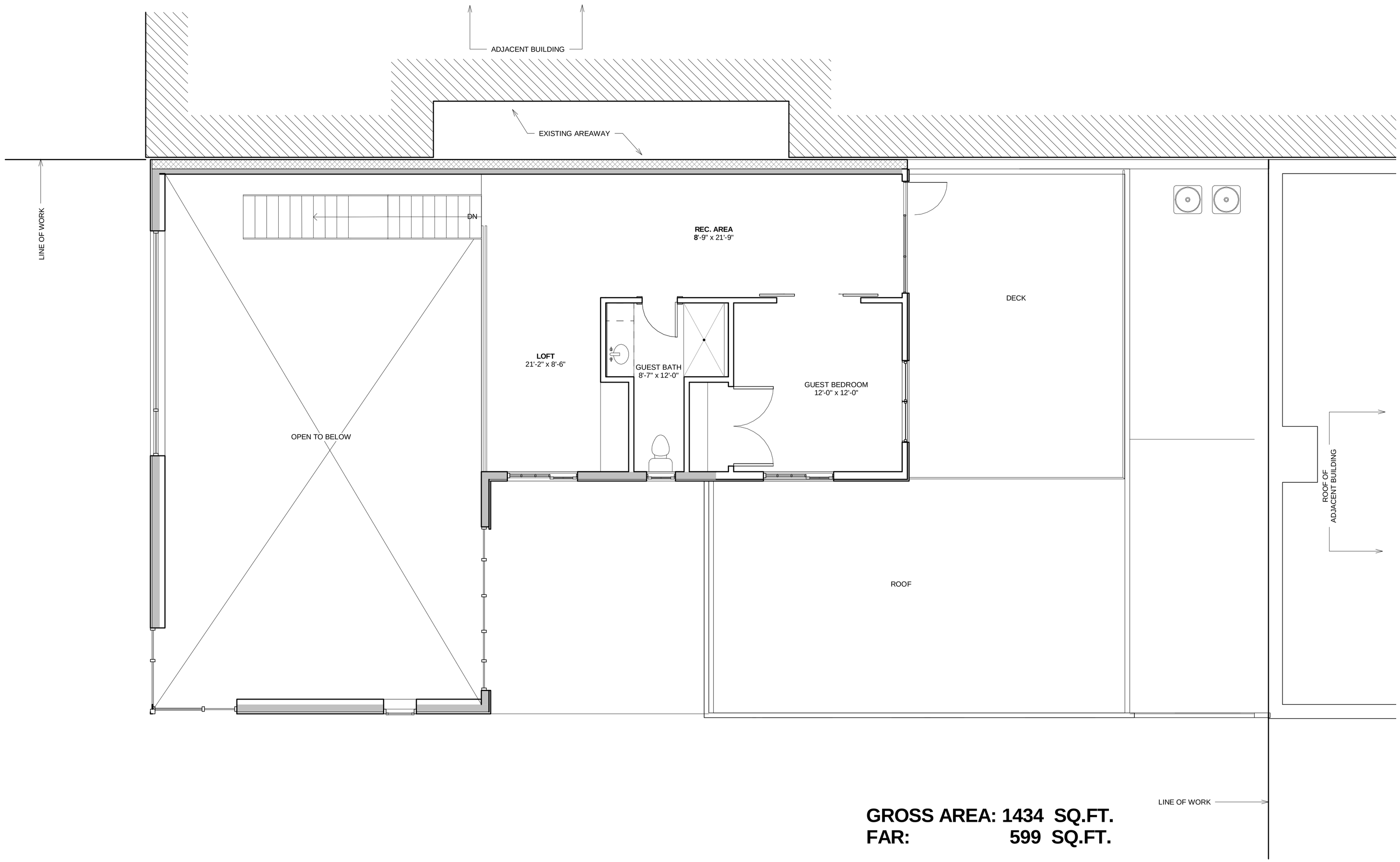

GROSS AREA: 1434 SQ.FT.
FAR: 599 SQ.FT.

1 Third Floor Plan
1/4" = 1'-0"

JMAC ARCHITECTS
1273 Washington Pike
Bridgeville, PA 15017
t. 412.257.9010
f. 412.257.3085

ISSUE:

Issued for Review
04.08.2014

PROJECT:

1500 Bingham St. Apartments

South Side
Pittsburgh, PA 15203

12-004

THESE DRAWINGS ARE FOR REVIEW OF DESIGN AND SCOPE DESCRIPTION ONLY. NO REPRESENTATION IS MADE TO THE ACCURACY OF THE DRAWINGS WITH RESPECT TO EXISTING DIMENSIONS OR CONDITIONS. ALL CONSULTANTS AND CONTRACTORS MUST VERIFY ANY AND ALL DIMENSIONS AND CONDITIONS WHICH ARE CRITICAL TO THEIR WORK.

No.	Issue Date	Project Status

Third Floor Plan

1500 Bingham St. Apartments
1/4" = 1'-0"

A-103

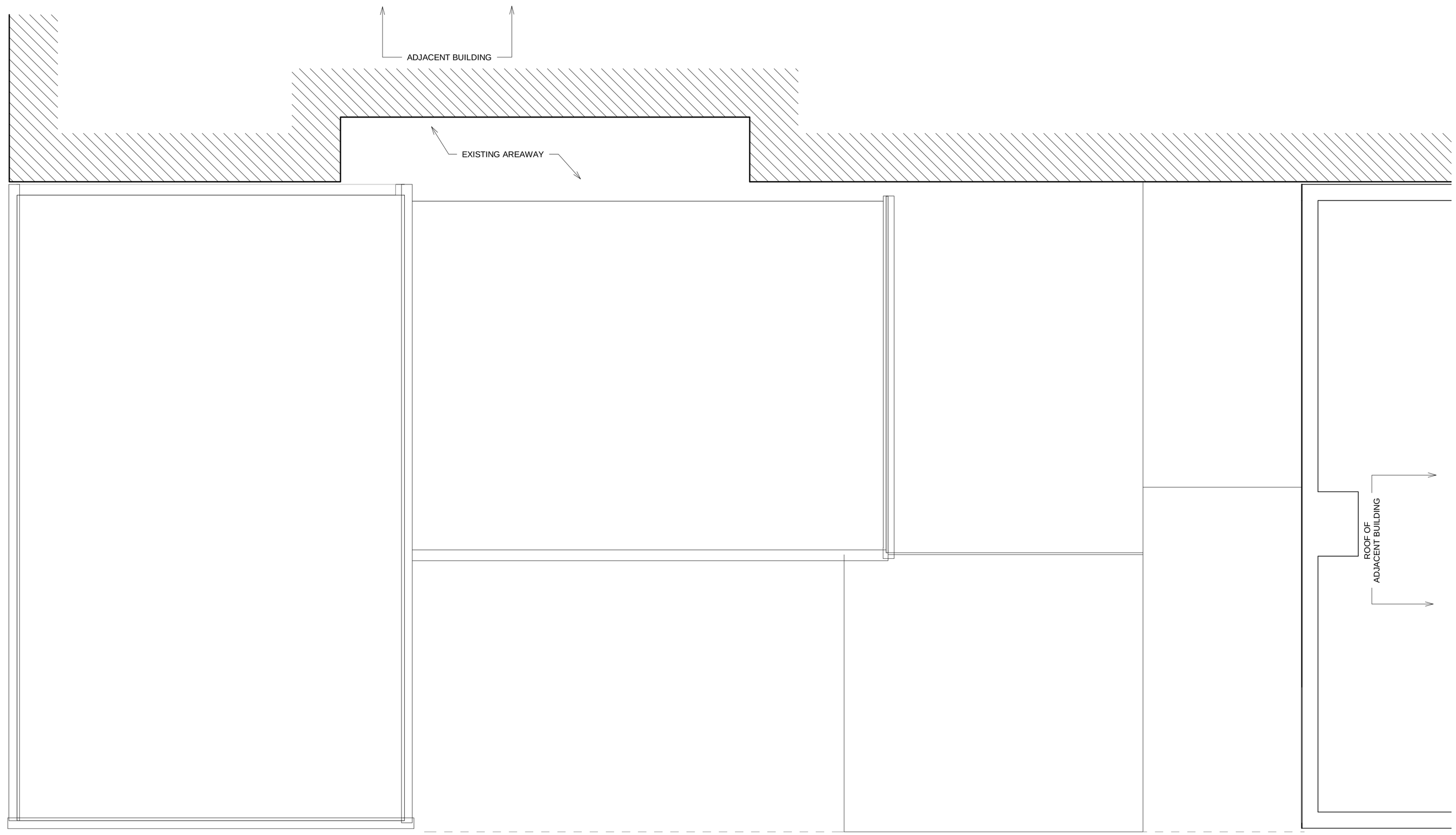

1 Roof Plan
1/4" = 1'-0"

JMAC ARCHITECTS

1273 Washington Pike
Bridgeville, PA 15017

t. 412.257.9010
f. 412.257.3085

ISSUE:

Issued for Review
04.08.2014

PROJECT:

1500 Bingham St.
Apartments

South Side
Pittsburgh, PA 15203

12-004

THESE DRAWINGS ARE FOR REVIEW OF DESIGN AND SCOPE DESCRIPTION ONLY. NO REPRESENTATION IS MADE TO THE ACCURACY OF THE DRAWINGS WITH RESPECT TO EXISTING DIMENSIONS OR CONDITIONS. ALL CONSULTANTS AND CONTRACTORS MUST VERIFY ANY AND ALL DIMENSIONS AND CONDITIONS WHICH ARE CRITICAL TO THEIR WORK.

No.	Issue Date	Project Status

Roof Plan

1500 Bingham St. Apartments
1/4" = 1'-0"

A-105

1 15th Street Elevation
1/4" = 1'-0"

JMAC ARCHITECTS
1273 Washington Pike
Bridgeville, PA 15017
t. 412.257.9010
f. 412.257.3085

ISSUE:

Issued for Review
04.08.2014

PROJECT:

1500 Bingham St. Apartments

South Side
Pittsburgh, PA 15203

12-004

THESE DRAWINGS ARE FOR REVIEW OF DESIGN AND SCOPE DESCRIPTION ONLY. NO REPRESENTATION IS MADE TO THE ACCURACY OF THE DRAWINGS WITH RESPECT TO EXISTING DIMENSIONS OR CONDITIONS. ALL CONSULTANTS AND CONTRACTORS MUST VERIFY ANY AND ALL DIMENSIONS AND CONDITIONS WHICH ARE CRITICAL TO THEIR WORK.

No.	Issue Date	Project Status

15th Street Elevation

1500 Bingham St. Apartments
1/4" = 1'-0"

A-200

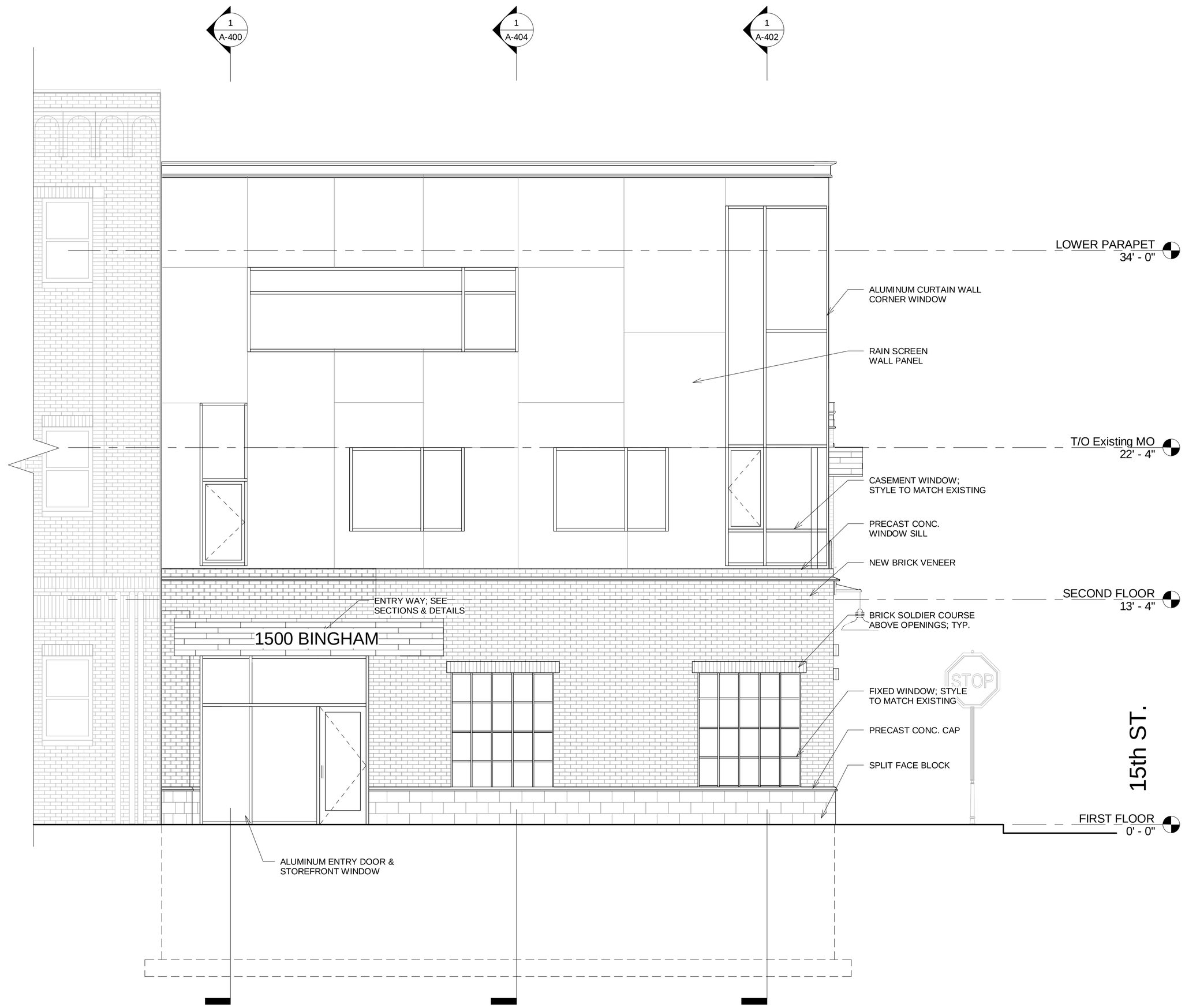

1 Bingham Street Elevation
1/4" = 1'-0"

JMAC ARCHITECTS
1273 Washington Pike
Bridgeville, PA 15017
t. 412.257.9010
f. 412.257.3085

ISSUE:

Issued for Review
04.08.2014

PROJECT:

1500 Bingham St. Apartments

South Side
Pittsburgh, PA 15203

12-004

THESE DRAWINGS ARE FOR REVIEW OF DESIGN AND SCOPE DESCRIPTION ONLY. NO REPRESENTATION IS MADE TO THE ACCURACY OF THE DRAWINGS WITH RESPECT TO EXISTING DIMENSIONS OR CONDITIONS. ALL CONSULTANTS AND CONTRACTORS MUST VERIFY ANY AND ALL DIMENSIONS AND CONDITIONS WHICH ARE CRITICAL TO THEIR WORK.

No.	Issue Date	Project Status

Bingham Street Elevation

1500 Bingham St. Apartments
1/4" = 1'-0"

A-201

HEARING NOTICE

1500

ONE WAY
Bingham St
ONE WAY
S 13th St

NO PARKING
TOW AWAY ZONE
JJT•6592
PGH-GTRS

NO
PARKING
TOW AWAY
ZONE

Division of Development Administration and Review
City of Pittsburgh, Department of City Planning
200 Ross Street, Third Floor
Pittsburgh, Pennsylvania 15219

HISTORIC REVIEW COMMISSION OF PITTSBURGH
Application for a Certificate of Appropriateness

DEADLINE:
Completed applications must be received at least 13 working days prior to the HRC hearing, when a hearing is required

FEE SCHEDULE:
See attached. Please make check payable to: *Treasurer, City of Pittsburgh.*

STAFF USE ONLY:

DATE RECEIVED: _____

LOT AND BLOCK NUMBER: _____

WARD: _____

FEE PAID: _____

ADDRESS OF PROPERTY:

1514 E. Carson Street.
Pgh, PA. 15203

DISTRICT:

_____

OWNER:

NAME: Mario's Group

ADDRESS: 1514 E. Carson St.
Pgh. PA. 15203

PHONE: 412-418-3039

EMAIL: mariosgroup@icloud.com

APPLICANT:

NAME: America Construction.

ADDRESS: 225 Butler Street.
Pgh. PA. 15223

PHONE: (412) 781-2900

EMAIL amerconst@earthlink.net.

REQUIRED ATTACHMENTS:

☒ Drawings ☒ Photographs ☒ Renderings ☒ Site Plan ☐ Other

Submitted already

DETAILED DESCRIPTION OF PROPOSED PROJECT:

Replace windows at Mario's Restraunt located at 1514 E. Carson St. Pittsburgh, PA. 15203

SIGNATURES:

OWNER: _____ DATE: _____

APPLICANT: _____ DATE: _____

E Carson St
1514 E. Carson Street
Roland St
S 17th St
837
Carey W

IRON CITY BEER
SIERRA NEVADA
Blue
1514
MARIO'S
Blue Ions
Yuengling
IRON CITY BEER

BLUE MOON
Blue
Firm McCords

AMERICO
CONSTRUCTION COMPANY

225 Butler Street Pittsburgh, PA 15223

412 / 781-2900
Fax 412 / 781-5772

Corey Clark
Mario's Restaurant
1514 East Carson Street
Pittsburgh, PA 15203
PH: 412-418-3039
mariosgroup@icloud.com

RE: Window replacement with accordion style window's

For the installation of accordion style windows

Scope of work
The existing four windows would be removed and the openings prepped for the installation of four accordion style windows with the following sizes.

Width	Hight
79	82
67	82
89.75	68.75
89.75	68.75

All windows will be bronze aluminum frames with one inch insulated E glass.

There will be four panes of glass per window opening.

Total Price: $33,000.00

Emeric Criscella 5/5/2014

Submitted By: Date:
Emeric A Criscella, President
Americo Construction Co.

Accepted By: Date:

PQ65850 QUOTE - AMERICO

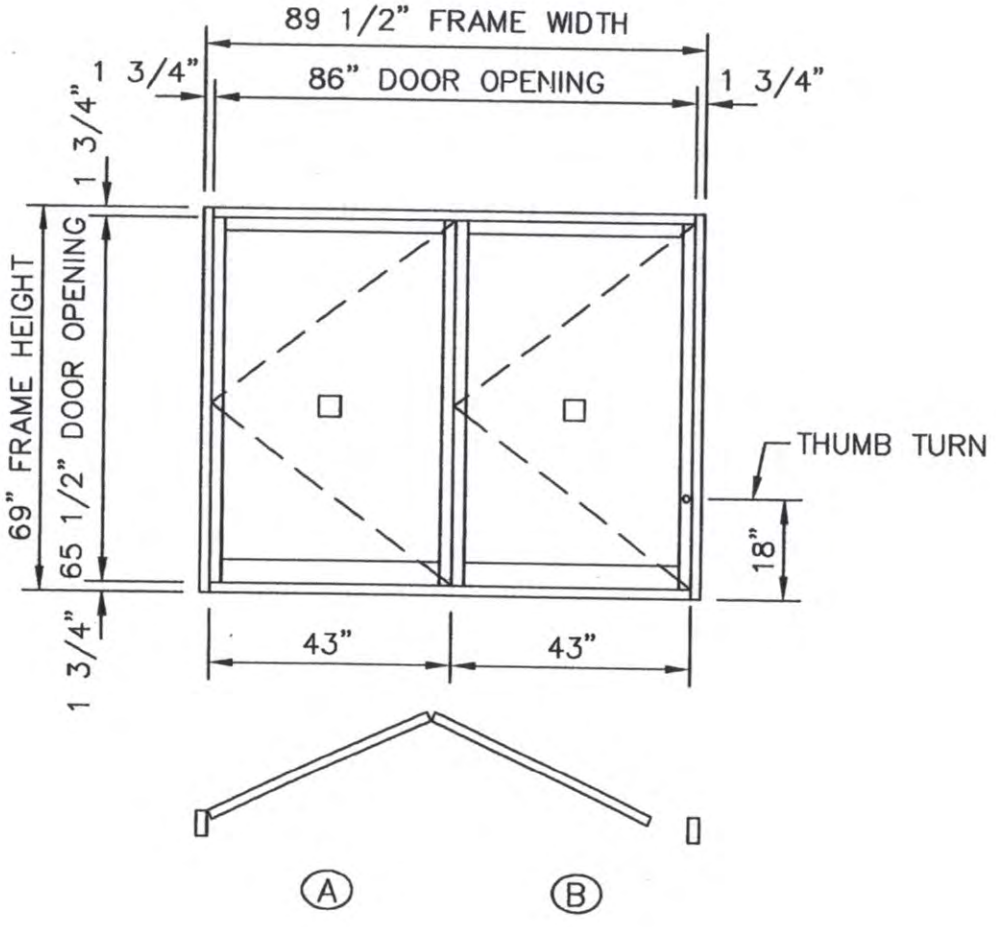

APPROVED FOR FABRICATION
BY: _____
COMPANY: _____
DATE: _____

GLASS STOPS:
☐ 1" TEMPERED GLASS
~~○ 1/4" TEMPERED GLASS~~

DOOR # 1 – TWO REQ'D – DARK BRONZE ANODIZED

NARROW STILE DOORS W/4" BOTTOM RAILS.
CONTINUOUS GEAR HINGES (ALL DOORS) & 1" GLASS STOPS.
LEAF "A" – 43" LH IN–ACTIVE LEAF. TOP OR BOTTOM EXPOSED FLUSH BOLT.
NO PUSH/PULLS.
LEAF "B" – 43" RH ACTIVE LEAF. TOP OR BOTTOM EXPOSED FLUSH BOLT.
MS LOCK WITH THUMB TURN, NO PUSH/PULLS.
1–3/4" X 4 1/2" NON–TRANSOM FRAME, WITH 1–3/4 X 4–1/2" SILL

UNITED PLATE GLASS CO.
108 GRUNDMAN DRIVE.
BUTLER, PA 16001

CUSTOMER: **ABBIE GLASS COMPANY**	
PROJECT: **AMERICO PROJECT**	
DRAWN BY: **DJT**	DATE: **5/12/13**
DRAWING DESCRIPTION: **AMERICO PROPOSAL "A"**	
SCALE: **NONE**	SHEET#: **1 OF 3**

PQ65850 QUOTE - AMERICO

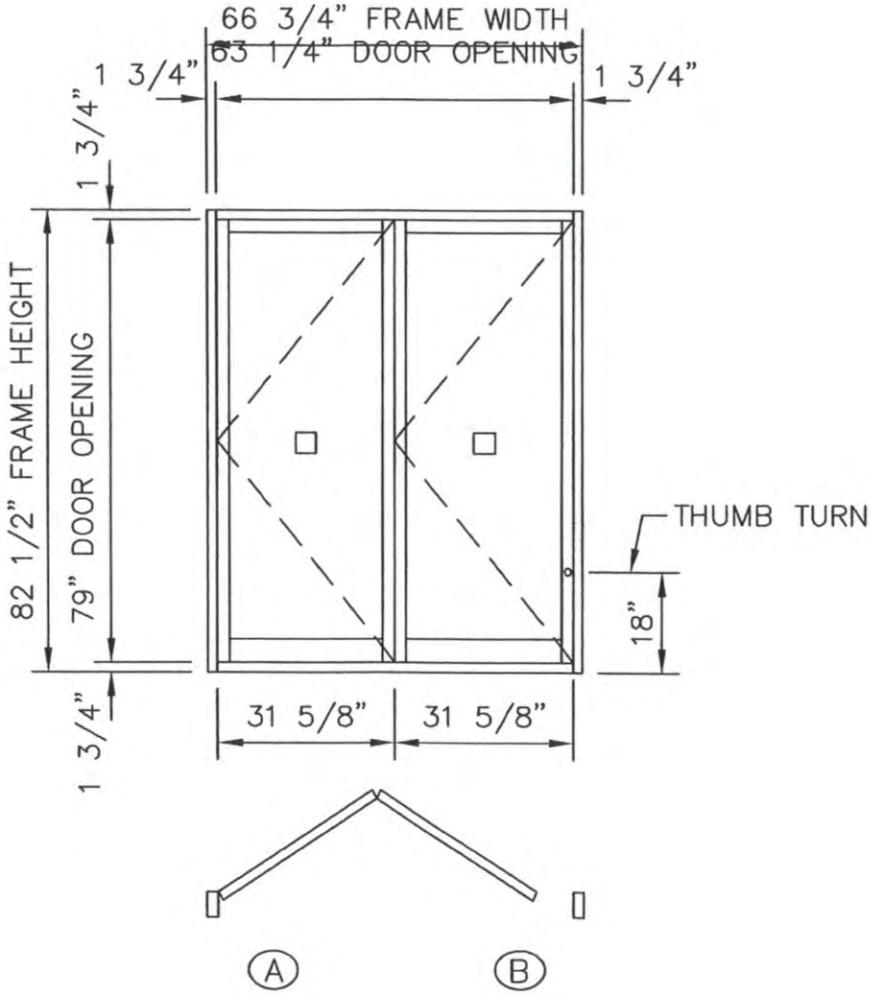

APPROVED FOR FABRICATION

BY: _____

COMPANY: _____

DATE: _____

GLASS STOPS:

☐ 1" TEMPERED GLASS

~~○ 1/4" TEMPERED GLASS~~

DOOR # 3 – ONE REQ'D – DARK BRONZE ANODIZED

NARROW STILE DOORS W/4" BOTTOM RAILS.
CONTINUOUS GEAR HINGES (ALL DOORS) & 1" GLASS STOPS.
LEAF "A" – 31-5/8" LH IN-ACTIVE LEAF. TOP OR BOTTOM EXPOSED FLUSH BOLT.
NO PUSH/PULLS.
LEAF "B" – 31-5/8" RH ACTIVE LEAF. TOP OR BOTTOM EXPOSED FLUSH BOLT.
MS LOCK WITH THUMB TURN, NO PUSH/PULLS.
1-3/4" X 4 1/2" NON-TRANSOM FRAME, WITH 1-3/4 X 4-1/2" SILL

UNITED PLATE GLASS CO.
108 GRUNDMAN DRIVE.
BUTLER, PA 16001

CUSTOMER: **ABBIE GLASS COMPANY**	
PROJECT: **AMERICO PROJECT**	
DRAWN BY: **DJT**	DATE: **5/12/13**
DRAWING DESCRIPTION: **AMERICO PROPOSAL "A"**	
SCALE: **NONE**	SHEET#: **3 OF 3**

PQ65850 QUOTE - AMERICO

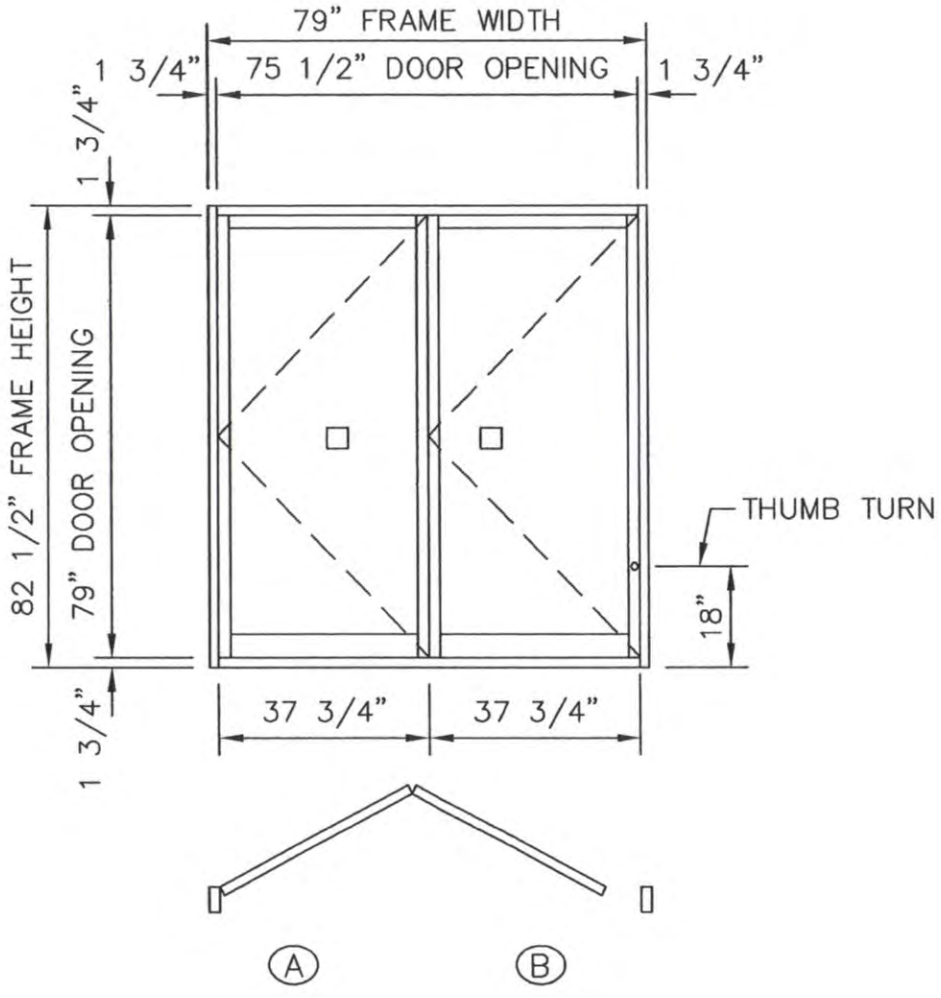

APPROVED FOR FABRICATION

BY: _____

COMPANY: _____

DATE: _____

GLASS STOPS:

☐ 1" TEMPERED GLASS

~~○ 1/4" TEMPERED GLASS~~

DOOR # 2 – ONE REQ'D – DARK BRONZE ANODIZED

NARROW STILE DOORS W/4" BOTTOM RAILS.
CONTINUOUS GEAR HINGES (ALL DOORS) & 1" GLASS STOPS.
LEAF "A" – 37-3/4" LH IN-ACTIVE LEAF. TOP OR BOTTOM EXPOSED FLUSH BOLT.
NO PUSH/PULLS.
LEAF "B" – 37-3/4" RH ACTIVE LEAF. TOP OR BOTTOM EXPOSED FLUSH BOLT.
MS LOCK WITH THUMB TURN, NO PUSH/PULLS.
1-3/4" X 4 1/2" NON-TRANSOM FRAME, WITH 1-3/4 X 4-1/2" SILL

UNITED PLATE GLASS CO.
108 GRUNDMAN DRIVE.
BUTLER, PA 16001

CUSTOMER: **ABBIE GLASS COMPANY**	
PROJECT: **AMERICO PROJECT**	
DRAWN BY: **DJT**	DATE: **5/12/13**
DRAWING DESCRIPTION: **AMERICO PROPOSAL "A"**	
SCALE: **NONE**	SHEET#: **2 OF 3**

2.07a
Standard Entrances
4500 Door Jamb - Narrow Stile With Continuous Hinge

CAD DETAIL FILE NO.
160DRJBNSCH

STANDARD SIZES

SINGLE DOORS	DOUBLE DOORS
3'-0" X 7'-0"	5'-0" X 7'-0"
3'-6" x 7'-0"	6'-0" x 7'-0"

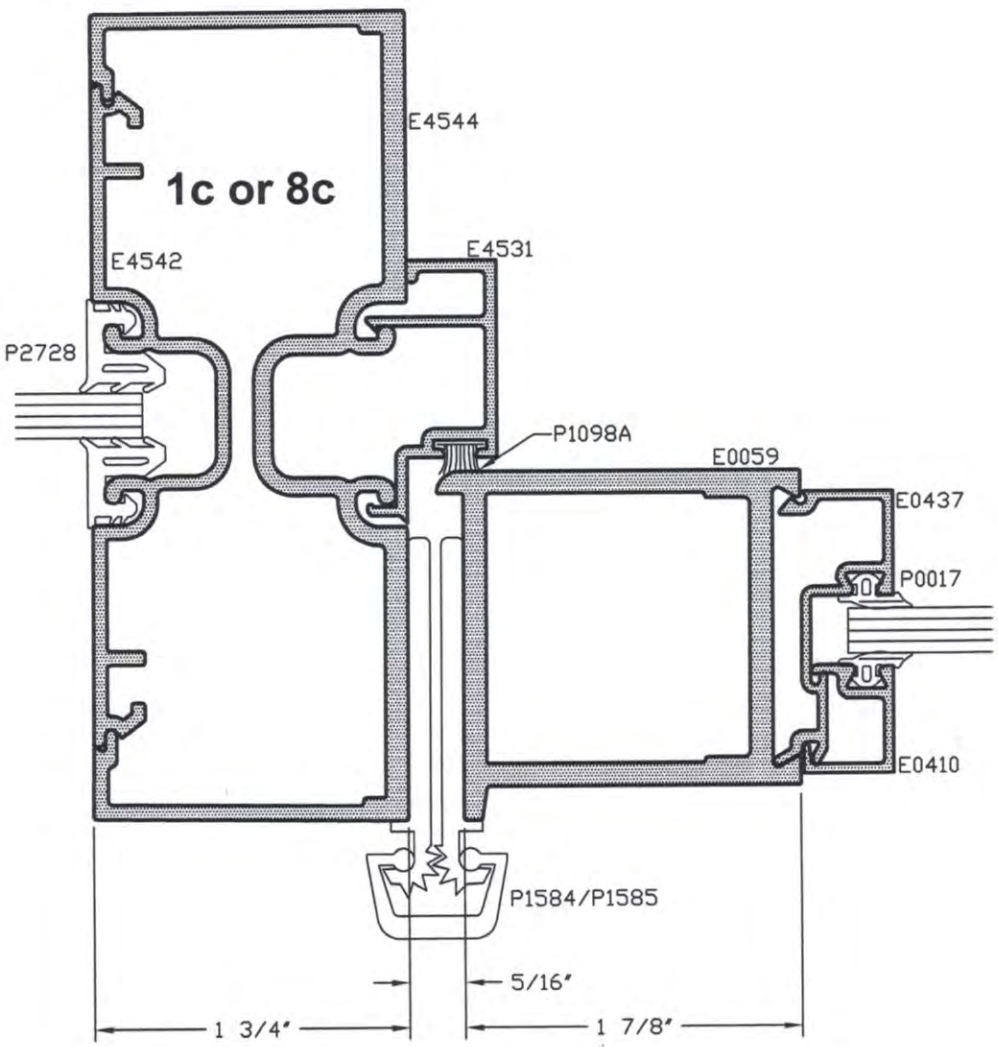

TUBELITE®
DEPENDABLE
LEADERS IN ECO-EFFICIENT STOREFRONT, CURTAINWALL AND ENTRANCE SYSTEMS
2010

*SEALANT, ROD, & ANCHORS NOT BY TUBELITE

2.09
Standard Entrances
Bottom Rail - Offset Pivot or Butt Hinge

CAD DETAIL FILE NO.
090DRBR

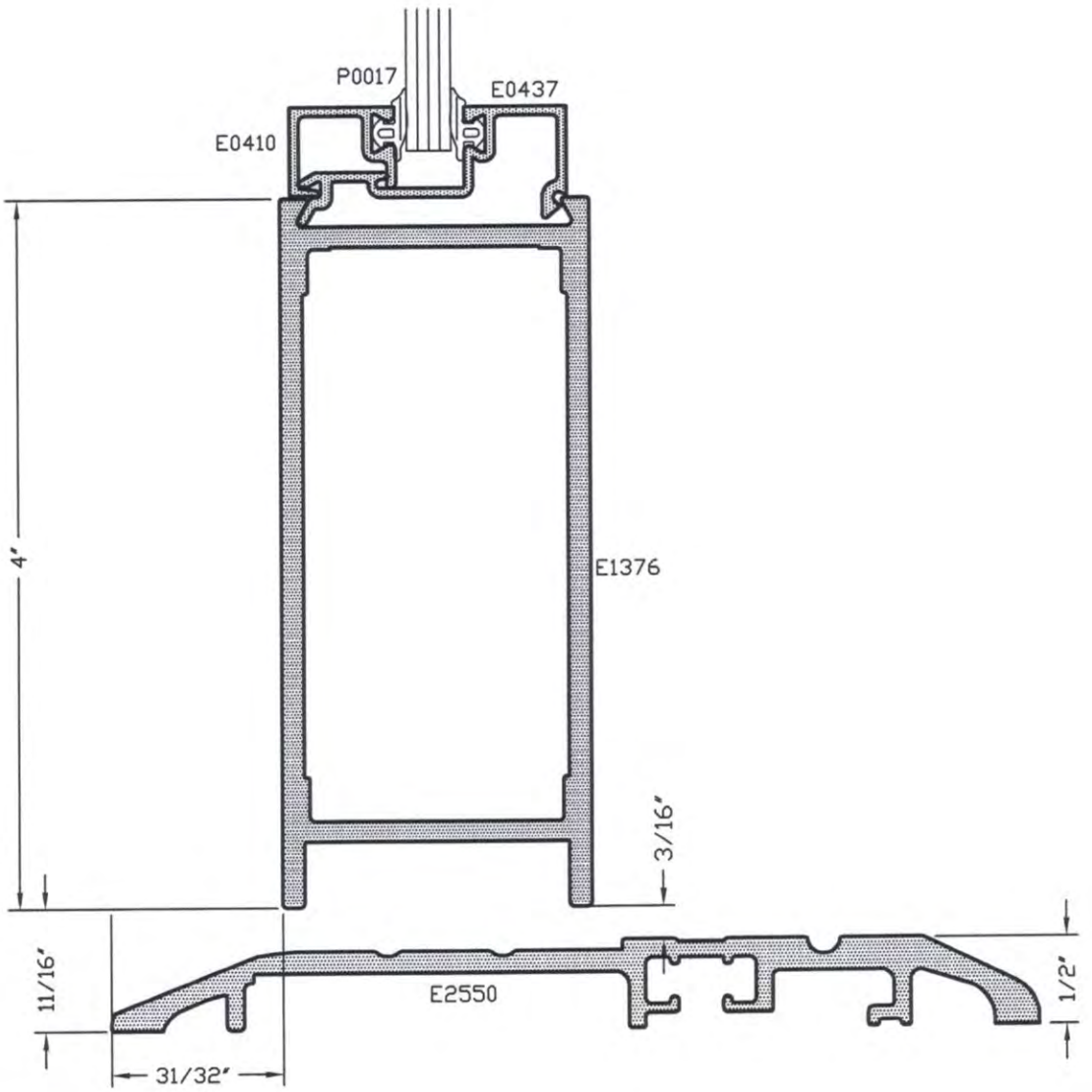

*SEALANT, ROD, & ANCHORS NOT BY TUBELITE

TUBELITE®
DEPENDABLE
LEADERS IN ECO-EFFICIENT STOREFRONT, CURTAINWALL AND ENTRANCE SYSTEMS
2013

2.08
Standard Entrances
Head - Narrow Stile Offset Pivot or Butt Hinge

CAD DETAIL FILE NO.
090DRTRNS

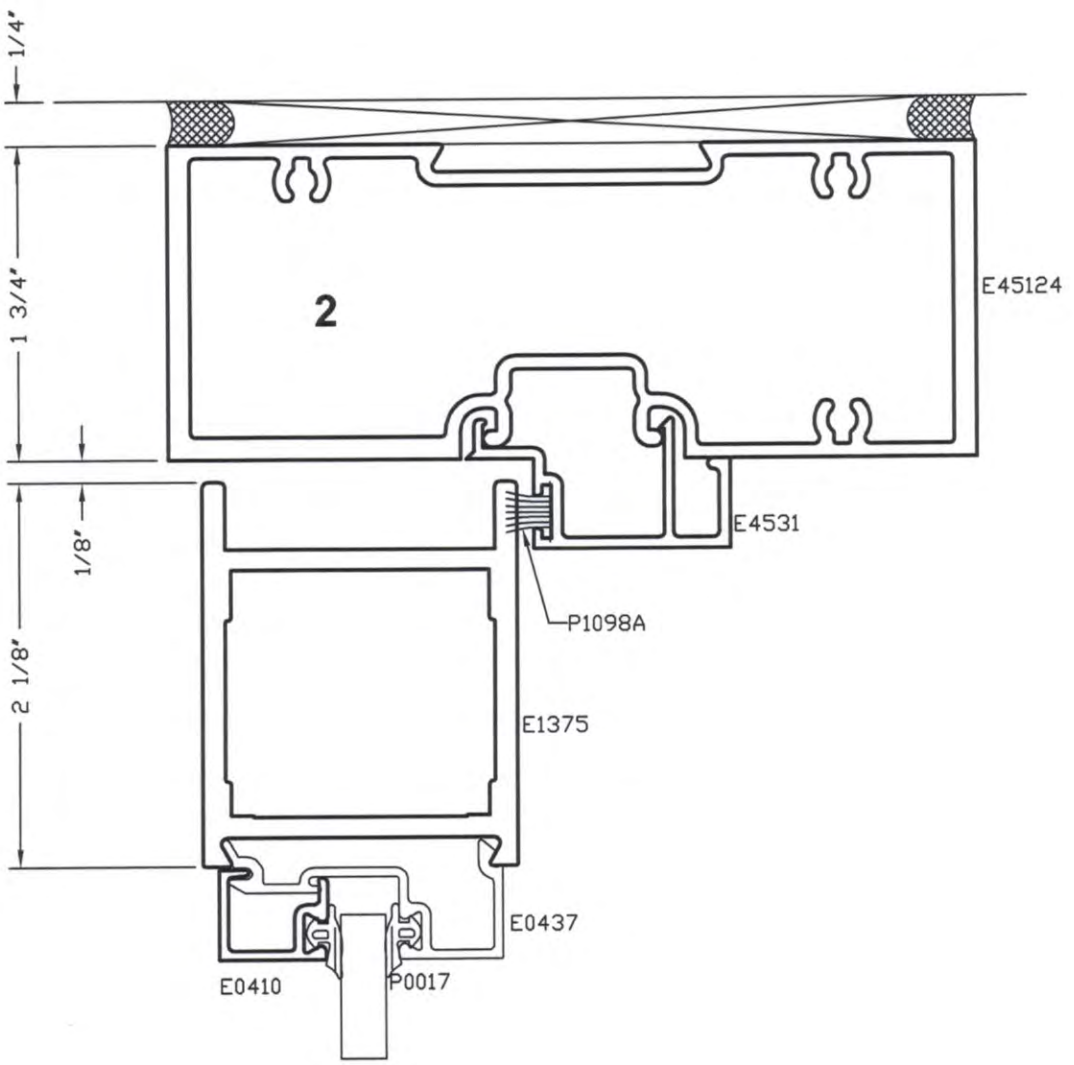

TUBELITE®
DEPENDABLE
LEADERS IN ECO-EFFICIENT STOREFRONT, CURTAINWALL AND ENTRANCE SYSTEMS
2013

*SEALANT, ROD, & ANCHORS NOT BY TUBELITE

CAD DETAIL FILE NO.
090STILE

BUTT HINGE OR OFFSET PIVOTS HINGE OR LOCK STILE

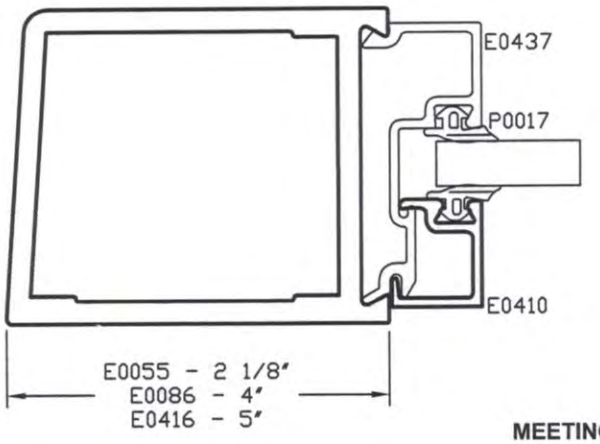

CENTER PIVOT HINGE OR LOCK STILE

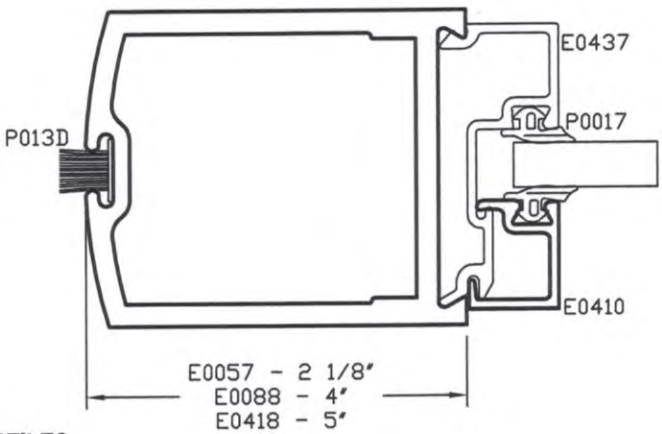

MEETING STILES

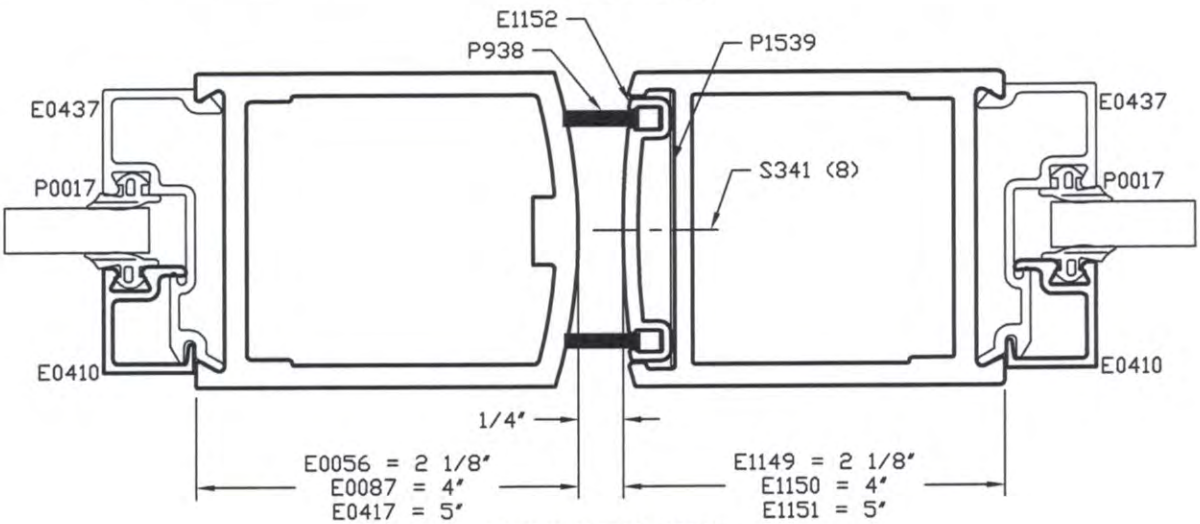

CONTINUOUS HINGE

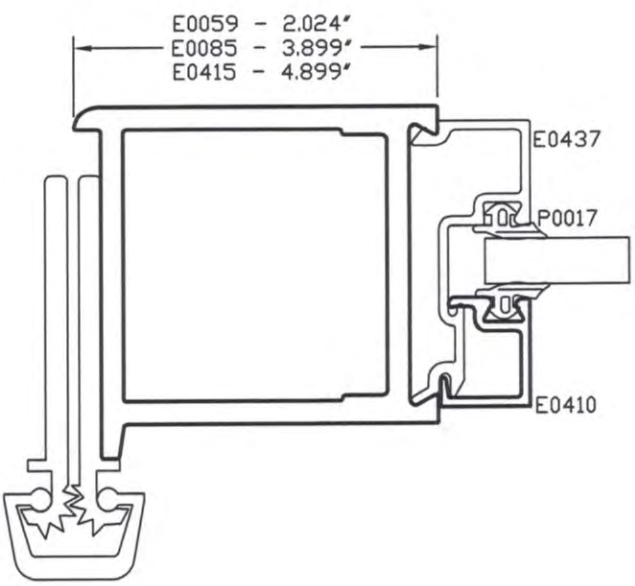

TUBELITE®
DEPENDABLE
LEADERS IN ECO-EFFICIENT STOREFRONT, CURTAINWALL AND ENTRANCE SYSTEMS
2013

2.18
Standard Entrances
Top and Bottom Rails

ALL RAILS CAN BE USED AS A TOP OR BOTTOM RAIL

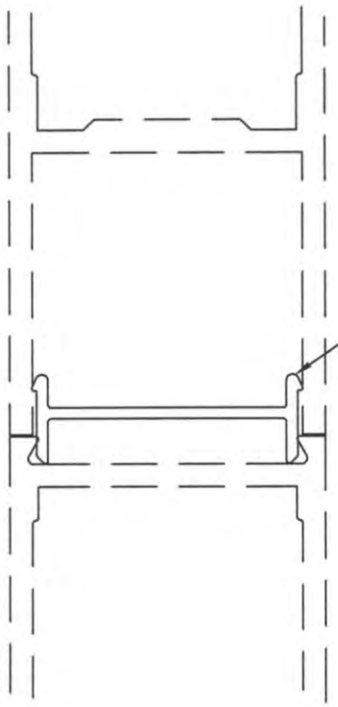

CAD DETAIL FILE NO.
090RAILS

E3021
MAY BE USED WITH ANY
COMBINATION OF BOTTOM RAILS
FOR DESIRED HEIGHT

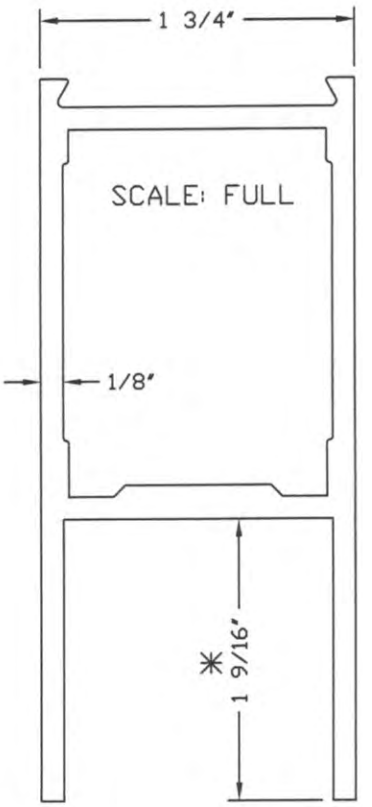

✳ TYPICAL POCKET DEPTH IS
1 9/16" EXCEPT THE FOLLOWING.

E0148 = 1 1/2"
E1375 = 1/4"
E1376 = 3/8"
E0255 = 7/8"

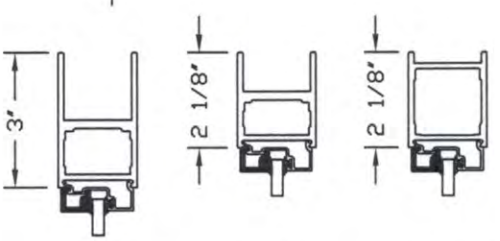

E0148 E0255 E1375

DETAIL SCALE - 1/4 SIZE

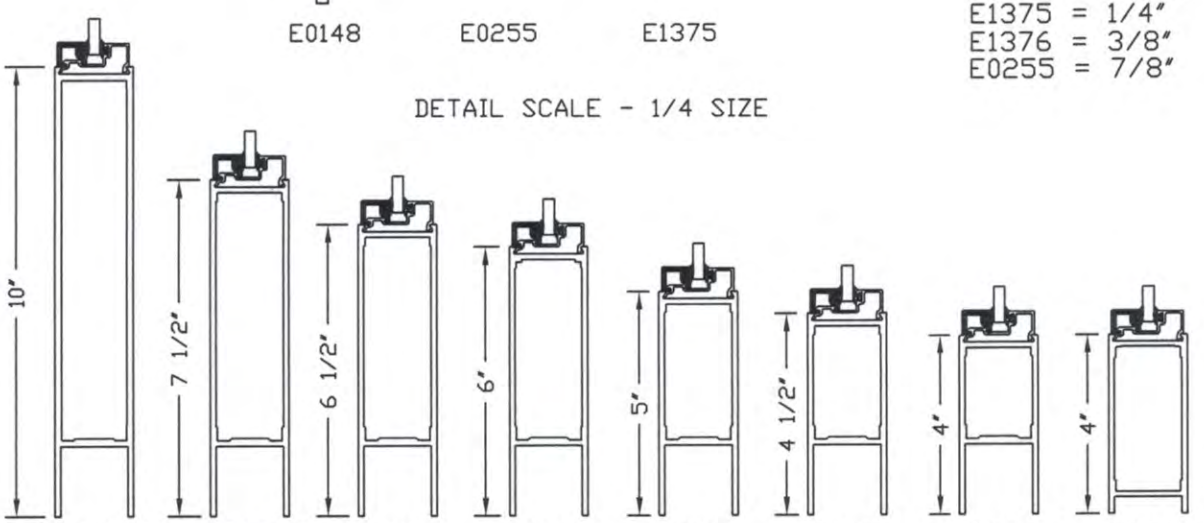

E2669 E2682 E0419 E3016 E0318 E0140 E0054 E1376

TUBELITE®
DEPENDABLE
LEADERS IN ECO-EFFICIENT STOREFRONT, CURTAINWALL AND ENTRANCE SYSTEMS
2013

TUBELITE®
DEPENDABLE
LEADERS IN ECO-EFFICIENT STOREFRONT, CURTAINWALL AND ENTRANCE SYSTEMS

SECTION 08 42 00

GLAZED ENTRANCES (STANDARD ENTRANCE SERIES)

PART 1 - GENERAL

1.1 SUMMARY

A. Section Includes: This Section includes, but shall not be limited to, glazed aluminum entrance doors, door frames, and hardware, and embedded items and connections for attaching them to building structure as indicated on the Drawings.

1.2 SYSTEM DESCRIPTION

A. General: Provide the manufacturer's glazed entrance systems, adapted to the application indicated, and modified as required to comply with performance requirements and materials specified, as demonstrated by testing the manufacturer's corresponding systems according to test methods indicated.
   1. Performance Requirements:
      a. Air Infiltration: Not more than 0.50 cfm (0.00025 m^3/s) per lineal foot (305 mm) at 1.57 psf (75 Pa) static air pressure differential, when tested in accordance with ASTM E283.

1.3 SUBMITTALS

A. General: See Section 01 33 00 - Submittal Procedures.
   1. Product Data: Submit product data showing material proposed.
   2. Shop Drawings: Submit shop drawings for each product and accessory required.
   3. Samples: If colors not preselected or scheduled, submit samples for initial color selection. Submit samples for verification purposes.

B. Quality Control Submittals:
   1. Design Data: Submit design calculations for the glazed entrance system and the connections for attaching them to the structure.
   2. Test Reports: Submit two copies each, plus the number the Contractor wants returned, of tests.
   3. Certificates:
      a. Submit designer's certification.
      b. Submit manufacturer's certification that the Installer is approved.

Retain below for project requiring LEED certification.

C. LEED Submittals: Furnish submittals that are required to comply with requirements for LEED certification.

D. Operation and Maintenance Manuals: Furnish complete operation and maintenance manuals describing the materials, devices, and procedures to be followed in operating, cleaning, and maintaining the work.

1.4 QUALITY ASSURANCE

A. Regulatory Requirements: Comply with applicable requirements of the laws, codes, ordinances, and regulations of Federal, State, and local authorities having jurisdiction. Obtain necessary approvals from such authorities.

B. Mock-Ups: Prior to installation of the work, fabricate and erect mock-ups for each type of finish and application required to verify selections made under sample submittals and to demonstrate aesthetic effects as well as qualities of materials and execution.

C. Pre-Installation Conference: Conduct pre-installation conference in accordance with Section 01 31 19 - Project Meetings.

PART 2 - PRODUCTS

2.1 MANUFACTURERS

A. Basis of Design: Product specified is "Standard Entrances" as manufactured by Tubelite, Inc. Items specified are to establish a standard of quality for design, function, materials, and appearance. Equivalent products by listed manufacturers are acceptable. The Architect will be the sole judge of the basis of what is equivalent.
   1. Product shall be American-made.

2.2 MATERIALS

Retain below for project requiring LEED certification.

A. LEED Requirements: Provide products and materials that comply with requirements for LEED certification.

B. Materials:
   1. Extrusions shall be of aluminum alloy 6063-T5 extruded within commercial tolerance and free from defects impairing strength and/or durability. Door stile and rail sections shall be a minimum of 0.125 inch (3.2 mm) wall thickness. Door frame sections shall be of 0.080 inch (2.0 mm) minimum wall thickness increased to 0.125 inch (3.2 mm) at hardware attachment locations. Glazing and door moldings shall be a minimum of 0.050 inch (1.3 mm) wall thickness.
      a. Recycled Content: For all aluminum extrusions except those required for doors and door frames, provide manufacturer's proprietary product fabricated of aluminum with a recycled content of more than 70 percent ("Ecoluminum," Tubelite, Inc.).
   2. Steel tension rods of 0.375 inch (9.5 mm) diameter shall run the full width of the top and bottom rails and shall be fixed with steel plates and lock nuts.
   3. Door frame members shall have a continuous wool pile/vinyl fin weatherstripping at the head and jamb members. Provide bottom rail weatherstrip at threshold if indicated or scheduled. Door stops shall be of snap-in design on butt hinge and offset pivot applications, eliminating the use of exposed screws.

Retain below if narrow stile doors are applicable to the Project.

4. Stock (narrow stile) doors shall have an adjustable setting block in the top rail.

C. Narrow Stile Doors: Provide narrow (2-1/8 inches [54 mm]) stile doors and frames.

Retain above if narrow stile doors are applicable to the Project, retain below if medium stile doors are applicable to the Project.

D. Medium Stile Doors: Provide medium (4 inches [102 mm]) stile doors and frames.

E. Hardware: Stock entrance doors and frames shall have standard hardware as furnished by the manufacturer as follows:

Retain butt hinges, offset hinges, and/or center pivot hinges below as applicable to the Project.

---

1. Butt Hinged Doors: Hardware to be provided includes, but shall not be limited to, mortised ball bearing hinges, push bar, pull handle, threshold, deadbolt lock, lock faceplate, and flush bolts (for pairs of doors). Door closers are not included in standard door pricing, see Section 08 71 00 - Door Hardware.
2. Offset Pivot Doors: Hardware to be provided includes, but shall not be limited to, top and bottom pivots, push bar, pull handle, threshold, deadbolt lock, lock faceplate, and flush bolts (for pairs of doors). Door closers are not included in standard door pricing, see Section 08 71 00 - Door Hardware.
3. Center Pivot Doors: Hardware to be provided includes, but shall not be limited to, concealed overhead closer with bottom pivot, push bars, threshold, deadbolt lock, lock faceplate, and flush bolts (for pairs of doors). Door closers are not included in standard door pricing, see Section 08 71 00 - Door Hardware.

Retain below if applicable to the Project.

---

4. Custom Doors and Frame: See Section 08 71 00 - Door Hardware. Hardware furnished by others shall be sent to the door manufacturer for application.

2.3 FABRICATION

A. Carefully fit and match work with continuity of line and design. Rigidly secure members with hairline joints, unless otherwise indicated. Reinforce members and joints for rigidity and strength as needed to fulfill performance requirements.
   1. Door glazing shall be by means of an interior and exterior fixed gasket of high quality extruded elastomeric material.
   2. Conceal fasteners unless otherwise indicated.
   3. Separate dissimilar materials with a heavy coating of epoxy paint or other suitable permanent separation as required to prevent galvanic action.

2.4 FINISHES

A. General: Comply with NAAMM MFM for recommendations relative to application and designation of finishes. Finish designations prefixed by "AA" conform to the system established by the Aluminum Association for designating aluminum finishes.

Retain finishes below which are applicable to the Project.

B. Aluminum Finishes ("Eco-Efficient"):
   1. Class I Clear Anodized Finish: AA-M10-C21-A41 complying with AAMA 611.

2. Class II, Clear Anodized Finish: AA-M10-C21-A31 complying with AAMA 611.
3. Class I Color Anodized Finish: AA-M10-C21-A44 complying with AAMA 611. Provide color as indicated or, if not indicated, as selected by the Architect from the manufacturer's standards.
4. Class II, Color Anodized Finish: AA-M10-C21-A32/A34 complying with AAMA 611. Provide color as indicated or, if not indicated, as selected by the Architect from the manufacturer's standards.
5. High Performance Organic Coating: AA-C12-C42-R1x.
   a. Standard Two-Coat Polyvinylidene Fluoride (PVDF) Finish Coating: Manufacturer's standard thermocured system, complying with AAMA 2605, composed of primer and color topcoat containing not less than 70 percent PVDF resin by weight. Provide color as indicated or, if not indicated, as selected by the Architect from the manufacturer's standards.
   b. Special Three-Coat Polyvinylidene Fluoride (PVDF) Finish Coating: Manufacturer's standard three-coat thermocured system, complying with AAMA 2605, composed of primer, color coat, and clear topcoat, with both color coat and clear topcoat containing not less than 70 percent PVDF resin by weight. Provide color as indicated or, if not indicated, as selected by the Architect from the manufacturer's standards.

PART 3 - EXECUTION

3.1 EXAMINATION

A. Verification of Conditions: Examine areas and conditions under which the work is to be installed, and notify the Contractor in writing, with a copy to the Owner and the Architect, of any conditions detrimental to the proper and timely completion of the work. Do not proceed with the work until unsatisfactory conditions have been corrected.
   1. Beginning of the work shall indicate acceptance of the areas and conditions as satisfactory by the Installer.

3.2 PREPARATION

A. Coordinate and furnish anchors, concrete inserts, sleeves, anchor bolts, etc., that are to be embedded in concrete or masonry construction. Coordinate delivery of such items to the Project site.

3.3 INSTALLATION

A. General: Installation shall be in accordance with reviewed product data, final shop drawings, the manufacturer's specifications and recommendations, and as indicated on the Drawings.
   1. Erection Tolerances: Comply with manufacturer's published instructions.

3.4 ADJUSTING AND CLEANING

A. Touch-Up Painting: Immediately after installation, touch-up scratched, nicked, abraded, chipped, or otherwise damaged areas of the finish so as to be unnoticeable.

B. Cleaning: Wash to remove mortar, plaster, sprayed fire-resistive material, and any other deleterious material from finished surfaces immediately.

3.5 DEMONSTRATION

A. Maintenance Instructions: Instruct the Owner's personnel who will be responsible for window washing after the time of final acceptance.

3.6 PROTECTION

A. Provide final protection and maintain conditions in a manner acceptable to the Installer, that shall ensure that the glazed entrances shall be without damage at time of Substantial Completion.

END OF SECTION

DISCLAIMER STATEMENT

This guide specification is intended to be used by a qualified construction specifier. This guide specification is not intended to be verbatim as a project specification without appropriate modifications for the specific use intended. The guide specification must be used and coordinated with the procedures of each design firm, and the particular requirements of a specific construction project. This guide specification is subject to change without written notice by the manufacturer.

Division of Development Administration and Review
City of Pittsburgh, Department of City Planning
200 Ross Street, Third Floor
Pittsburgh, Pennsylvania 15219

HISTORIC REVIEW COMMISSION OF PITTSBURGH
Application for a Certificate of Appropriateness

DEADLINE:
Completed applications must be received at least 13 working days prior to the HRC hearing, when a hearing is required

FEE SCHEDULE:
See attached. Please make check payable to: *Treasurer, City of Pittsburgh.*

STAFF USE ONLY:
DATE RECEIVED: 4/17/14
LOT AND BLOCK NUMBER: 12K-14
WARD: 17th
FEE PAID: yes

ADDRESS OF PROPERTY:
2000 EAST CARSON ST.

DISTRICT:
E Carson St

OWNER:
NAME: 5 OAKS Development
ADDRESS: 1817 EAST CARSON ST.
PGH PA 15203
PHONE: 877-348-3625
EMAIL:

APPLICANT:
NAME: Classic Deck IMPRESSIONS
ADDRESS: 2953 Brevard Ave
PGH, PA. 15227
PHONE: 412 496 5189
EMAIL: Classicdeckimpressions@comcast.net

REQUIRED ATTACHMENTS:
☒ Drawings ☒ Photographs ☒ Renderings ☒ Site Plan ☐ Other

DETAILED DESCRIPTION OF PROPOSED PROJECT:
ROOF TOP Deck on 3rd floor of Existing Building

SIGNATURES:
OWNER: _____ DATE: _____
APPLICANT: _____ classic deck IMPRESSIONS DATE: 4-16-14

E Carson St
2000 E. Carson Street
Carey Way

PAY HERE

80 South Side Flats 90
S 20th St
2000 South Side Flats 1900
E Carson St
NO TURN ON RED
7AM - 4PM
NO TURN ON RED
SOUTHSIDE STEAKS
OPEN FOR BUSINESS
SOUTHSIDE STEAKS
Pizza Hut
Utrecht
CANVAS
BRUSHES

1916
SOLOF BUILDING
S 20th St
SOUTHSIDE STEAKS
AUTHENTIC PHILLY CHEESESTEAKS
PORT AUTHORITY
50TH ANNIVERSARY
Bus Stop
NO TURN ON RED
CRX 067

1916
SOLOFF BUILDING
S 20th St
E Carson St
SOUTHSIDE STEAKS
OPEN FOR BUSINESS
NO TURN ON RED
Utrecht
art supplies
CANVAS
BRUSHES
PALETTES
BLICK

2000 East Carson Street
Designed for 5 Oaks Development
Designed by:
Classic Deck Impressions LLC

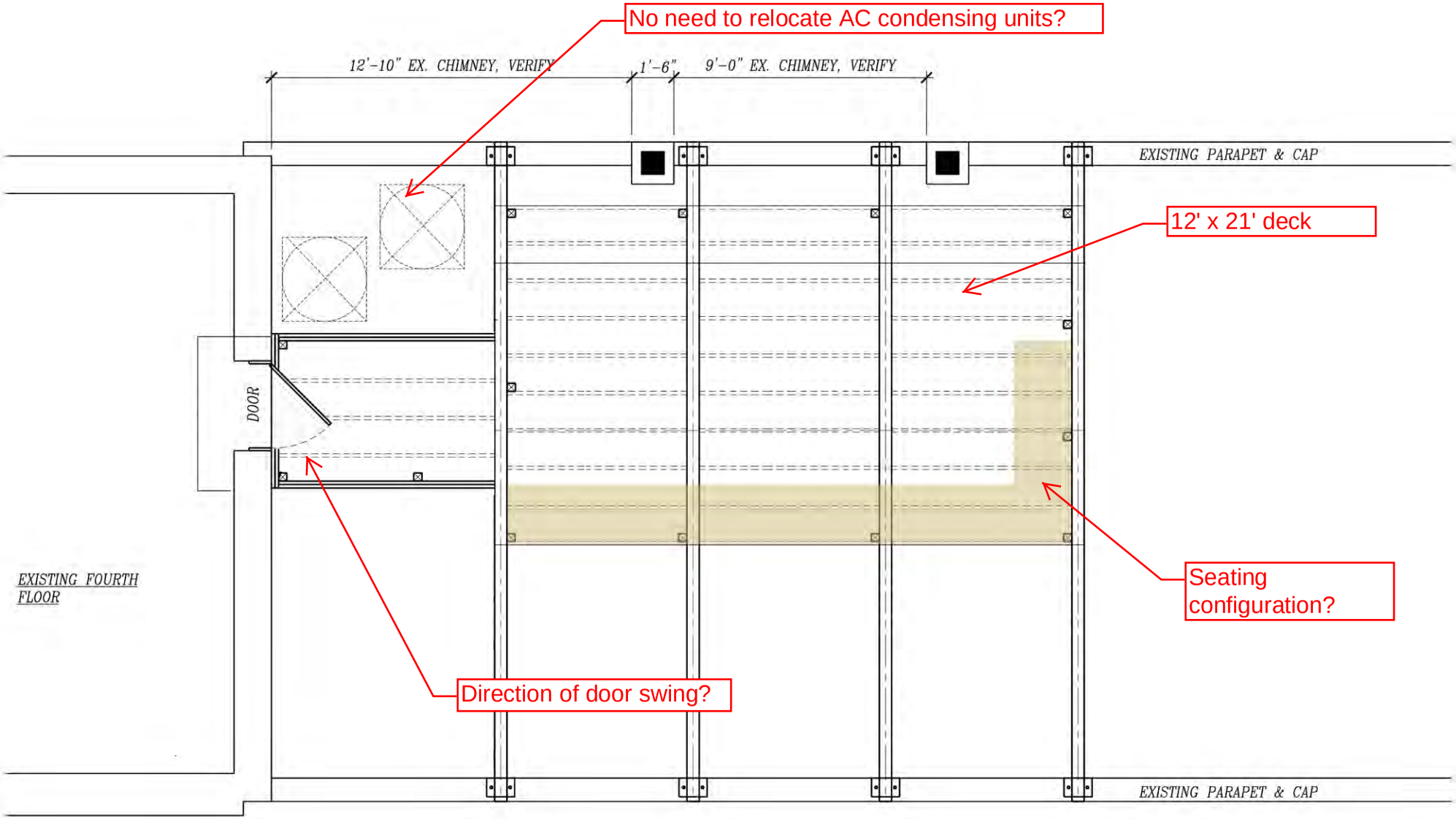

1
S.1

DECK FRAMING PLAN

SCALE: 3/8" = 1'-0"

Division of Development Administration and Review
City of Pittsburgh, Department of City Planning
200 Ross Street, Third Floor
Pittsburgh, Pennsylvania 15219

HISTORIC REVIEW COMMISSION OF PITTSBURGH
Application for a Certificate of Appropriateness

DEADLINE:
Completed applications must be received at least 13 working days prior to the HRC hearing, when a hearing is required

FEE SCHEDULE:
See attached. Please make check payable to: *Treasurer, City of Pittsburgh.*

STAFF USE ONLY:
DATE RECEIVED: 4/17/14
LOT AND BLOCK NUMBER: 1-D-130
WARD: 1st
FEE PAID: yes

ADDRESS OF PROPERTY: 25 MARKET SQUARE

DISTRICT: MARKET SQUARE

OWNER:
NAME: Vick Nicholas/Pete Lands
ADDRESS: 25 Market Sq.
Pittsburgh, PA 15222
PHONE: 412-261-4225
EMAIL: Nichnicholas9@aol.com

APPLICANT:
NAME: SIPP TEPE ARCHITECTS L.L.C.
ADDRESS: P.O. Box 332
N. LIMA, OHIO 44452
PHONE: 7245448160
EMAIL: ddsarch@yahoo.com

REQUIRED ATTACHMENTS:
☑ Drawings ☑ Photographs ☑ Renderings ☑ Site Plan ☐ Other

DETAILED DESCRIPTION OF PROPOSED PROJECT:
FRONT METAL GUARDRAIL TO PROTECT NEW ROOF DECK
ADDITIONAL CONCRETE PANEL / TPE WOOD FACED STRUCTURES

SIGNATURES:
OWNER: [signature] DATE: 4/17/14
APPLICANT: [signature] D.L.B. DATE: 4.16.14

Liberty Ave
Graeme St
25 Market Street
Forbes Ave
McMasters
Market Square

BEFORE PERSPECTIVE-FRONT FACADE
SCALE: NONE

1
A-000

ginkoaceae
Corporate Center:
Post Office Box 332
Tele: 330.549.0011
Cell (Sipp) : 724.544.8160 Cell (Tepe) :330.651.7543
11524 Market Street
North Lima,Ohio 44452
Fax: 330.549.0012
SIPP + TEPE ARCHITECTS, L.L.C.
[S + T] ARCH
Licensed and Registered:
OH., PA., TEXAS, W.VA.

An Fire Damage Renovations for:

NOLA - PERLE COMPLEX

Second Floor - 25 Graeme
Pittsburgh, Pennsylvania 15222
Contact Person: Yves Carreau-BIG Y Group 412 848 3183

PROJECT

RELEASE DATE: APRIL28, 2014
DRAWN/CHECKED BY: Douglas Sipp Andrew Swansinger
CHKD FILE LOCATION: 2014_11_NOLA_RENOVATION.DWG
PROJECT DESIGNATION: 2014-11

SEAL

REGISTERED ARCHITECT PENNSYLVANIA DOUGLAS D. SIPP RA-013058X

PERSPECTIVE

DRAWING TITLE

DRAWING NUMBER

A-001

ESTABLISHED- 1997
COPYRIGHT RESERVED- 2014

2		
1	REVISED PER HISTORIC PRESERV. COMM.- S.QUINN	05/15/14

AFTER
PERSPECTIVE-FRONT FACADE
SCALE: NONE

1
A-000

ginkoaceae
11524 Market Street
North Lima,Ohio 44452
Fax: 330.549.0012
Cell (Tepe) :330.651.7543
Corporate Center:
Post Office Box 332
Tele: 330.549.0011
Cell (Sipp) : 724.544.8160
SIPP + TEPE ARCHITECTS, L.L.C.
[S + T] ARCH
Licensed and Registered:
OH., PA., TEXAS, W.VA

An Fire Damage Renovations for:
NOLA - PERLE COMPLEX
Second Floor - 25 Graeme
Pittsburgh, Pennsylvania 15222
Contact Person: Yves Carreau-BIG Y Group 412 848 3183

PROJECT

RELEASE DATE: APRIL28, 2014
DRAWN/CHECKED BY: Douglas Sipp, Andrew Swansinger
2014_11_NOLA_RENOVATION.DWG
PROJECT DESIGNATION: 2014-11

SEAL

PERSPECTIVE

DRAWING TITLE

DRAWING NUMBER
A-001

ESTABLISHED- 1997
COPYRIGHT RESERVED- 2014

2		
1	REVISED PER HISTORIC PRESERV. COMM.- S.QUINN	05/15/14

BEFORE PERSPECTIVE- LEFT SIDE

SCALE: NONE

1 A-000

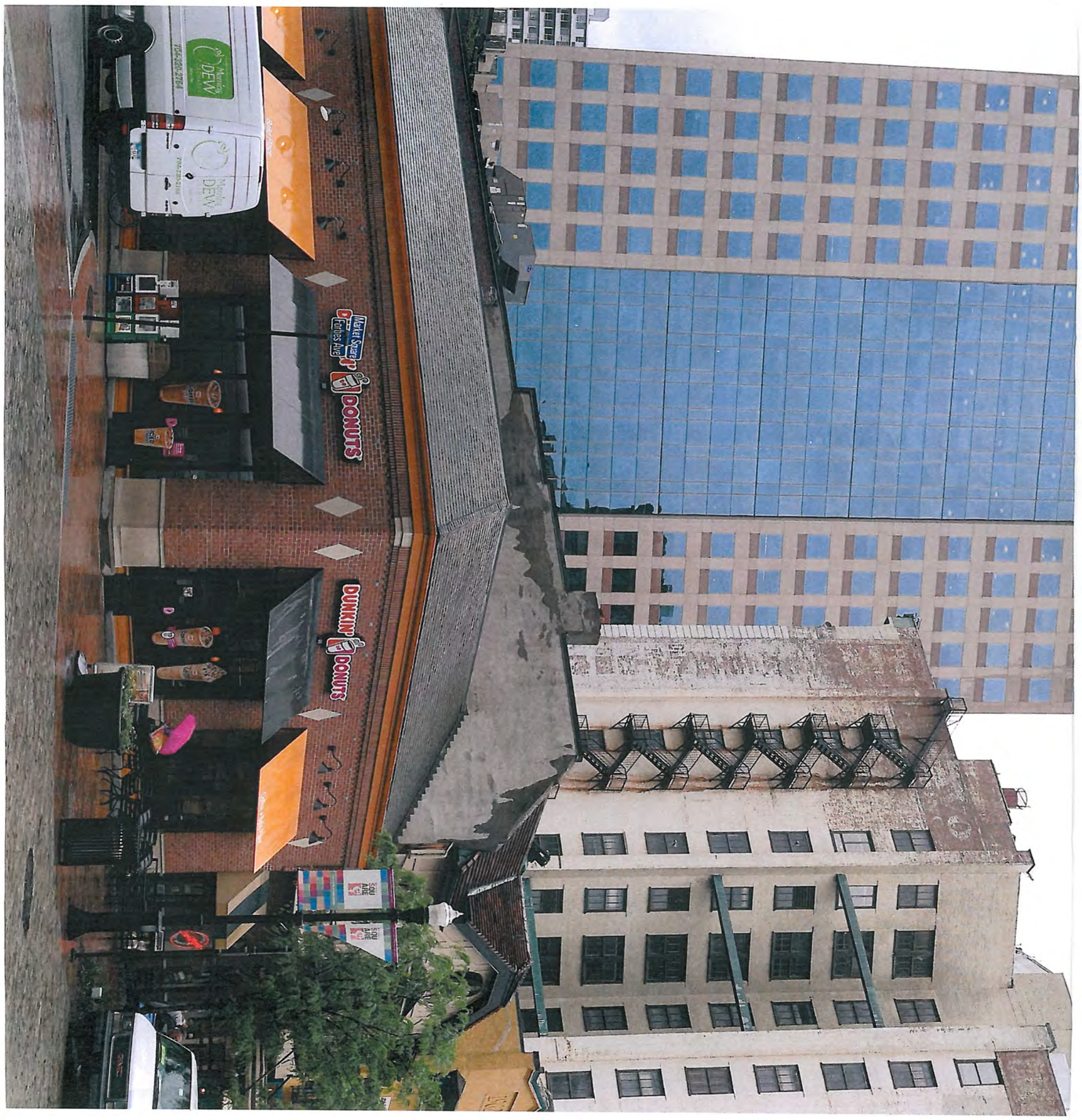

PERSPECTIVE

DRAWING TITLE

DRAWING NUMBER

A-000

ESTABLISHED 1997

COPYRIGHT RESERVED 2014

REVISED PER HISTORIC PRESERV COMM.- S.QUINN

SEAL

PROJECT

An Fire Damage Renovations for:

NOLA - PERLE COMPLEX

Second Floor - 25 Graeme
Pittsburgh, Pennsylvania 15222
Contact Person: Yves Carreau-BIG Y Group 412 848 3183

RELEASE DATE:	DRAWN/CHECKED BY:	CADD FILE LOCATION:	PROJECT DESIGNATION:
APRIL28, 2014	Douglas Sipp Andrew Swansinger	2014_11_NOLA_RENOVATION.DWG	2014-11

Corporate Center:
Post Office Box 332
Tele: 330.549.0011
Cell (Sipp) : 724.544.8160 Cell (Tepe) :330.651.7543

11524 Market Street
North Lima,Ohio 44452
Fax: 330.549.0012

Licensed and Registered: OH., PA., TEXAS, W.VA.

SIPP + TEPE ARCHITECTS, L.L.C.
[S+T]ARCH

ginkoaceae

AFTER PERSPECTIVE-LEFT SIDE
SCALE: NONE
1 A-000

ginkoaceae
Corporate Center:
Post Office Box 332
Tele: 330.549.0011
Cell (Sipp) : 724.544.8160 Cell (Tepe) :330.651.7543
11524 Market Street
North Lima,Ohio 44452
Fax: 330.549.0012
SIPP + TEPE ARCHITECTS, L.L.C.
[S + T] ARCH
Licensed and Registered:
OH., PA., TEXAS, W.VA.

An Fire Damage Renovations for:
NOLA - PERLE COMPLEX
Second Floor - 25 Graeme
Pittsburgh, Pennsylvania 15222
Contact Person: Yves Carreau-BIG Y Group 412 848 3183

PROJECT

RELEASE DATE: APRIL28, 2014
DRAWN/CHECKED BY: Douglas Sipp, Andrew Swansinger
2014_11_NOLA_RENOVATION.DWG
PROJECT DESIGNATION: 2014-11

SEAL

PERSPECTIVE

DRAWING TITLE

DRAWING NUMBER
A-001

ESTABLISHED: 1997
COPYRIGHT RESERVED: 2014

REVISED PER HISTORIC PRESERV. COMM.: S.QUINN

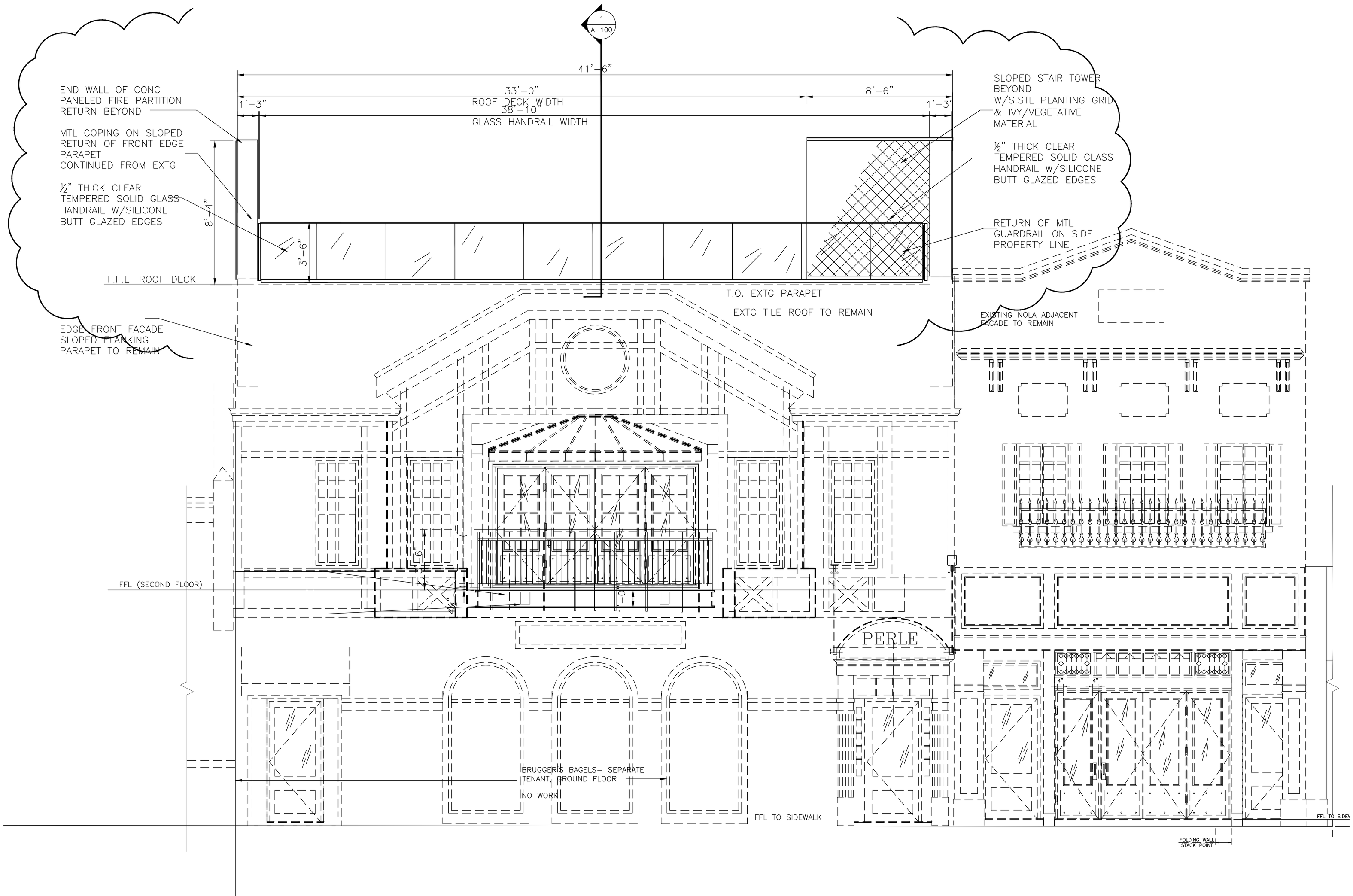

EXTERIOR FRONT ELEVATION
SCALE: 3/8"=1'-0"

1
A-100

PLOTTER DATE STAMP:

ginkoaceae

11524 Market Street
North Lima,Ohio 44452
Fax: 330.549.0012
Cell (Tepe) :330.651.7543

Corporate Center:
Post Office Box 332
Tele: 330.549.0011
Cell (Sipp) : 724.544.8160

SIPP + TEPE ARCHITECTS, L.L.C.
[S + T] A R C H

Licensed and Registered:
OH., PA., TEXAS, W.VA.

An Fire Damage Renovations for:

NOLA - PERLE COMPLEX

Third Floor - 25 Market Square
Pittsburgh, Pennsylvania 15222
Contact Person: Yves Carreau-BIG Y Group 412 848 3183

RELEASE DATE: APRIL 1, 2014
DRAWN/CHECKED BY: Douglas Sipp / Andrew Swartsinger
CADD FILE/LOCATION: 2014_11_NOLA_RENOVATION.DWG
PROJECT DESIGNATION: 2014-11

PROJECT

SEAL

REGISTERED ARCHITECT
PENNSYLVANIA
DOUGLAS SIPP RA-013038-A

FACADE ELEVATION, SECTION

DRAWING TITLE

DRAWING NUMBER

A-100

ESTABLISHED 1997
COPYRIGHT RESERVED 2014

NO.	REVISION	DATE
2		
1		

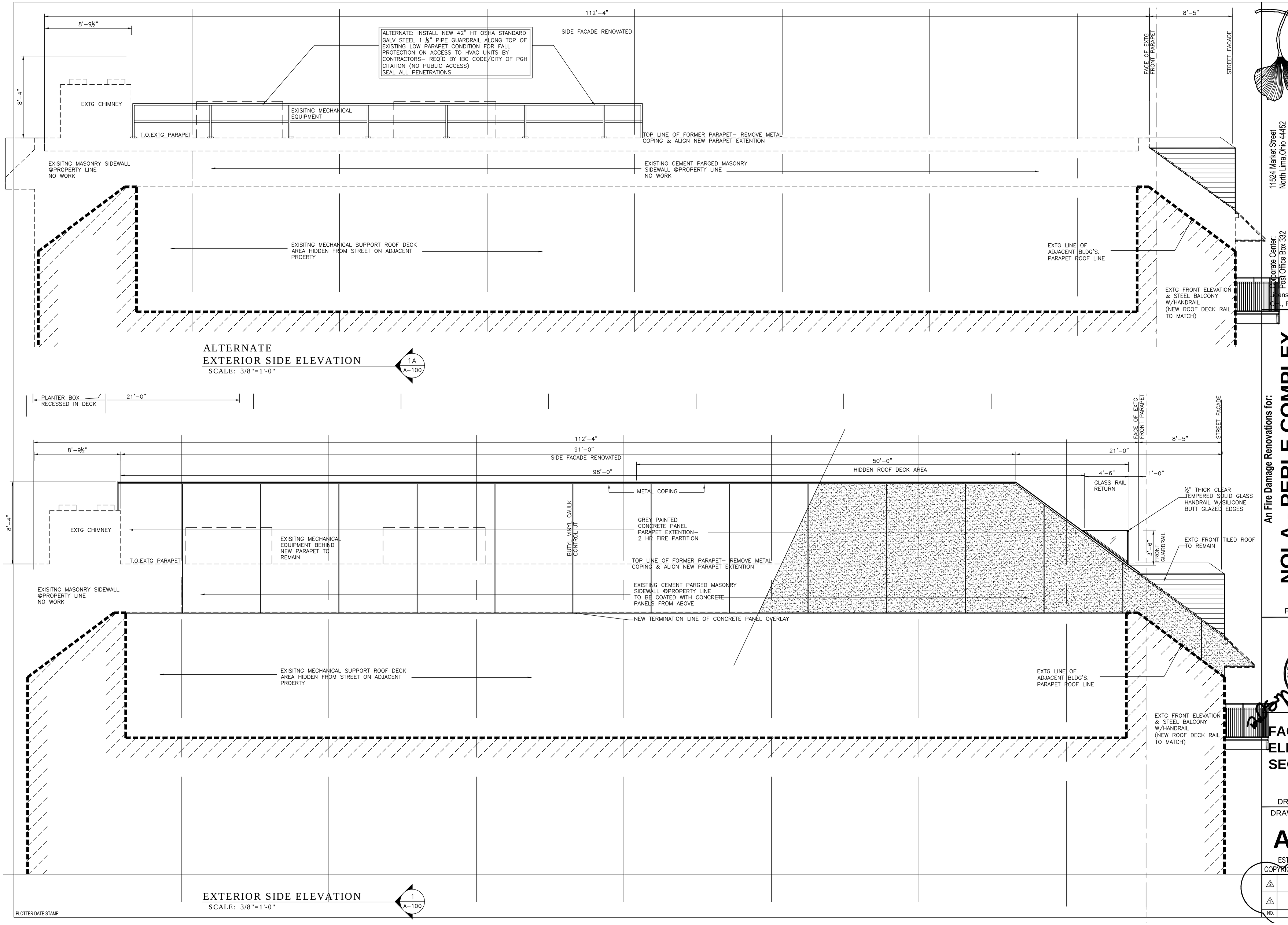

ALTERNATE
EXTERIOR SIDE ELEVATION
SCALE: 3/8"=1'-0"
1A
A-100

EXTERIOR SIDE ELEVATION
SCALE: 3/8"=1'-0"
1
A-100

PLOTTER DATE STAMP:

ginkoaceae
SIPP + TEPE ARCHITECTS, L.L.C.
[S+T]ARCH
11524 Market Street
North Lima, Ohio 44452
Fax: 330.549.0012
Cell (Tepe) :330.651.7543
Corporate Center:
Post Office Box 332
Tele: 330.549.0011
Cell (Sipp) : 724.544.8160
Licensed and Registered:
O.H., PA., TEXAS, W.VA.

An Fire Damage Renovations for:

NOLA - PERLE COMPLEX

Third Floor - 25 Market Square
Pittsburgh, Pennsylvania 15222
Contact Person: Yves Carreau-BIG Y Group 412 848 3183

PROJECT

RELEASE DATE: APRIL 1, 2014
DRAWN/CHECKED BY: Douglas Sipp, Andrew Swansinger
CADD FILE LOCATION: 2014_11_NOLA_RENOVATION.DWG
PROJECT DESIGNATION: 2014-11

SEAL

REGISTERED ARCHITECT PENNSYLVANIA DOUGLAS D. SIPP RA-013058X

FACADE ELEVATION, SECTION

DRAWING TITLE

DRAWING NUMBER

A-100

ESTABLISHED- 1997
COPYRIGHT RESERVED- 2014

NO.	REVISION	DATE
2		
1		

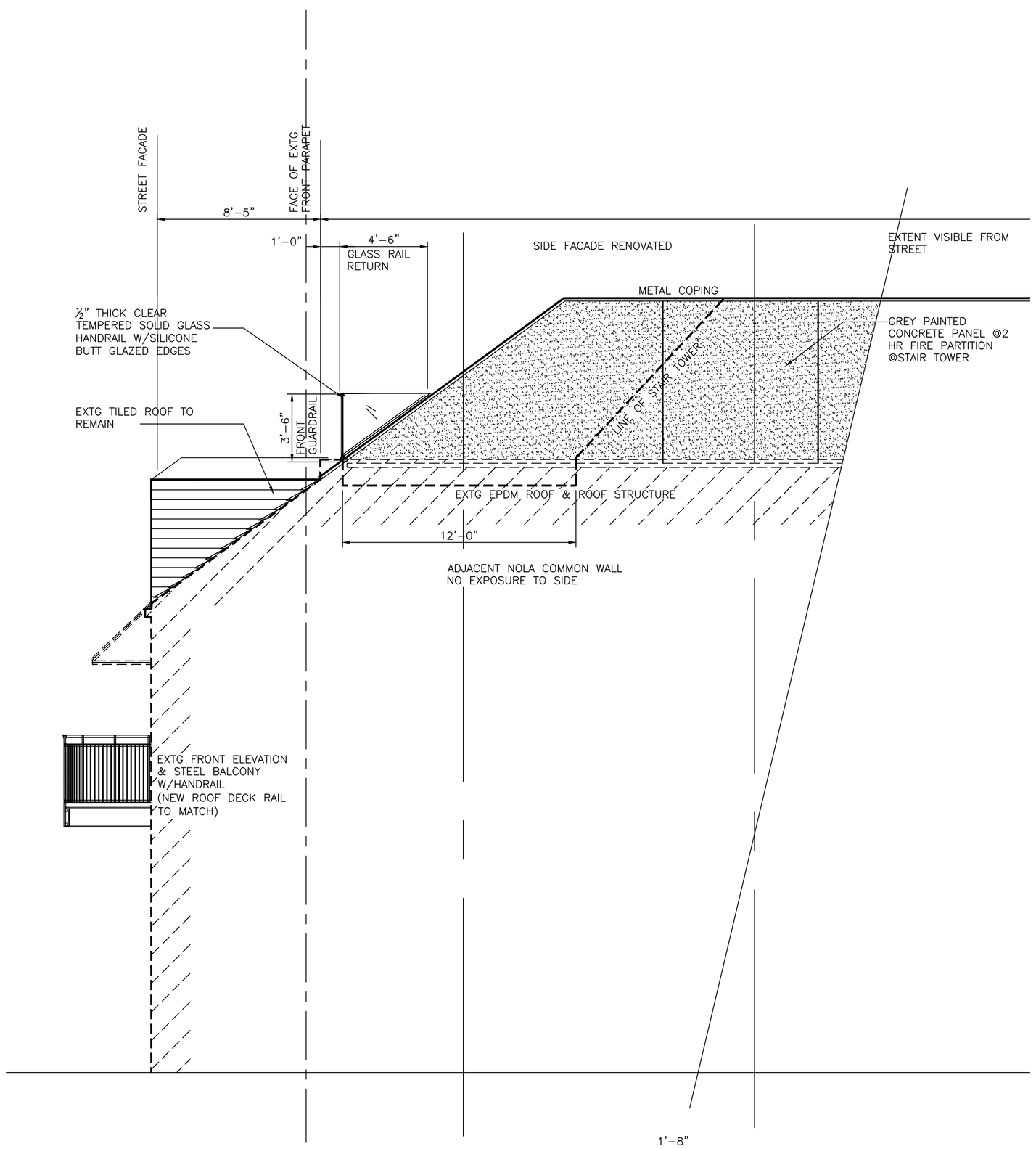

EXTERIOR NOLA SIDE ELEVATION

SCALE: 3/8"=1'-0"

PLOTTER DATE STAMP:

These Documents are the Property of Sipp Tepe Architects, L.L.C. and are Protected under the US Copyright Laws and Restrictions
Copyright 1997-2014, Sipp Tepe Architects, L.L.C.
No Reproduction or Use other than specified by this office is allowable without written consent of the firm.

THE CONTRACTOR SHALL REVIEW ALL CONDITIONS AND SHALL NOT ERECT, ASSEMBLE, OR OTHERWISE COMMENCE CONSTRUCTION WITHOUT MEETING THE MINIMUM REQUIREMENTS FOR SUBMITTALS AS REQUIRED BY THE PROJECT DOCUMENTS. FAILURE TO REVIEW AND APPROVE ALL REQUIRED SHOP DRAWINGS, SAMPLES, OR DATA PRIOR TO SUBMITTAL TO THE ARCHITECT MAY RESULT IN REJECTION OF SUBMITTED MATERIAL WITHOUT REVIEW. MATERIAL AND PRODUCT REVIEWS SHALL NOT RELIEVE THE CONTRACTOR OF RESPONSIBILITIES TO VERIFY FIELD OR COORDINATION REQUIREMENTS.

DO NOT SCALE DRAWINGS: CONTRACTOR MUST VERIFY ALL DIMENSIONS,FIELD CONDITIONS, AND CLEARANCES PRIOR TO COMMENCEMENT OF WORK AND/OR ORDERING OF MATERIALS.

WE CERTIFY THAT THESE PLANS HAVE BEEN PREPARED IN OUR OFFICE AND UNDER OUR SUPERVISION AND THAT TO THE BEST OF OUR KNOWLEDGE AND BELIEF, COMPLY WITH APPLICABLE LAWS, REGULATIONS, AS, AND ORDINANCES OF THE JURISDICTION RELATING TO THIS PROJECT.

ginkoaceae

Corporate Center:
Post Office Box 332
Tele: 330.549.0011
Cell (Sipp) : 724.544.8160

11524 Market Street
North Lima,Ohio 44452
Fax: 330.549.0012
Cell (Tepe) :330.651.7543

SIPP + TEPE ARCHITECTS, L.L.C.
[S + T] A R C H

Licensed and Registered:
OH., PA., TEXAS, W.VA.

An Fire Damage Renovations for:

NOLA - PERLE COMPLEX

Third Floor - 25 Market Square
Pittsburgh, Pennsylvania 15222
Contact Person: Yves Carreau-BIG Y Group 412 848 3183

PROJECT

CADD FILE LOCATION: 2014_11_NOLA_RENOVATION.DWG

PROJECT DESIGNATION: 2014-11

DRAWN/CHECKED BY: Douglas Sipp / Andrew Swansinger

RELEASE DATE: APRIL 1, 2014

SEAL

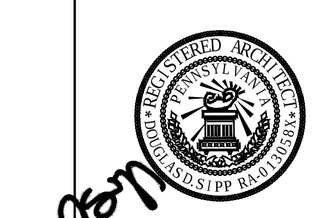

FACADE ELEVATION, SECTION

DRAWING TITLE

DRAWING NUMBER

A-102

ESTABLISHED-1997

COPYRIGHT RESERVED 2014

NO.	REVISION	DATE
2		
1		

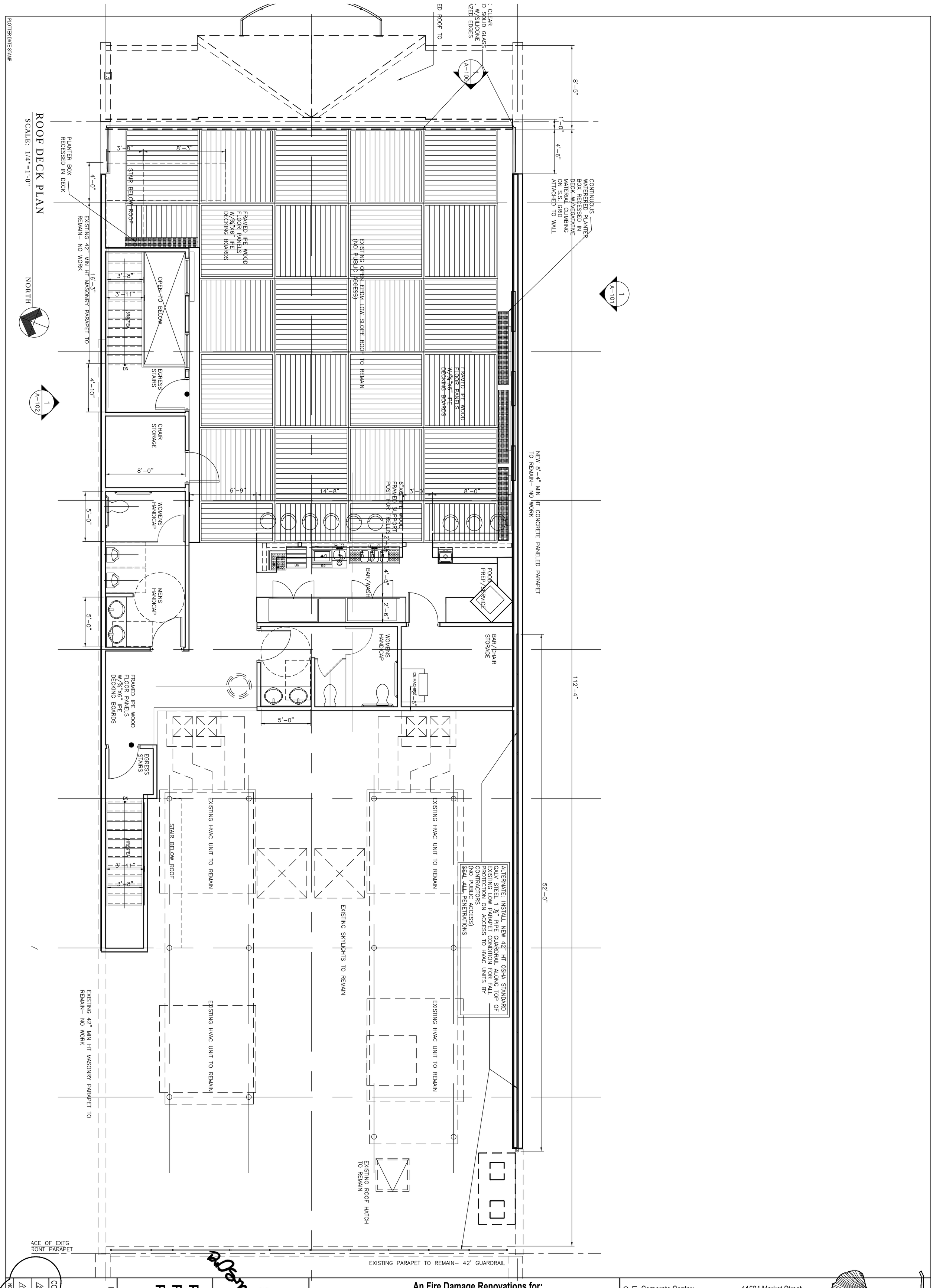

NO.	REVISION	DATE
2		
1		

ESTABLISHED 1997
COPYRIGHT RESERVED 2014

DRAWING NUMBER
A-204

DRAWING TITLE
PROPOSED ROOF DECK PLAN

SEAL

PROJECT

An Fire Damage Renovations for:

NOLA - PERLE COMPLEX

Third Floor - 25 Market Square
Pittsburgh, Pennsylvania 15222
Contact Person: Yves Carreau-BIG Y Group 412 848 3183

RELEASE DATE:	DRAWN/CHECKED BY:	CADD FILE LOCATION:	PROJECT DESIGNATION:
APRIL 1, 2014	Douglas Sipp Andrew Swansinger	2014_11_NOLA_RENOVATION.DWG	2014-11

Licensed and Registered: OH., PA., TEXAS, W.VA.

Corporate Center: 11524 Market Street
Post Office Box 332 North Lima,Ohio 44452
Tele: 330.549.0011 Fax: 330.549.0012
Cell (Sipp) : 724.544.8160 Cell (Tepe) :330.651.7543

SIPP + TEPE ARCHITECTS, L.L.C.
[S+T]ARCH

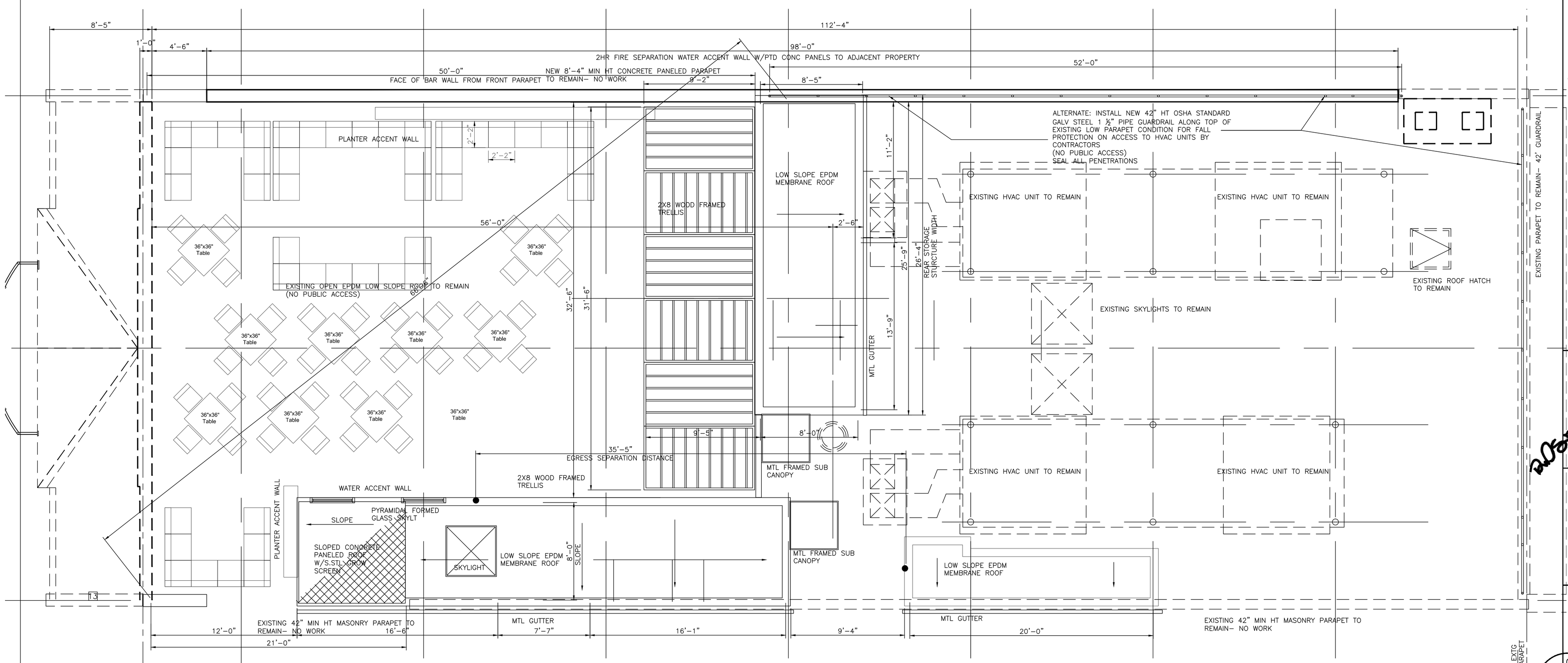

ROOF DECK ROOF/SEATING PLAN

SCALE: 1/4"=1'-0"

PLOTTER DATE STAMP:

ginkoaceae

Corporate Center:
Post Office Box 332
Tele: 330.549.0011
Cell (Sipp) : 724.544.8160 Cell (Tepe) :330.651.7543

11524 Market Street
North Lima,Ohio 44452
Fax: 330.549.0012

SIPP + TEPE ARCHITECTS, L.L.C.

[S + T] A R C H

Licensed and Registered:
OH., PA., TEXAS, W.VA.

An Fire Damage Renovations for:

NOLA - PERLE COMPLEX

Second Floor - 25 Graeme
Pittsburgh, Pennsylvania 15222
Contact Person: Yves Carreau-BIG Y Group 412 848 3183

DRAWN/CHECKED BY:	Douglas Sipp / Andrew Swansinger
CADD FILE LOCATION:	2014_11_NOLA_RENOVATION.DWG
RELEASE DATE:	APRIL 1, 2014
PROJECT DESIGNATION:	2014-11

PROJECT

SEAL

PROPOSED ROOF DECK'S ROOF PLAN

DRAWING TITLE

DRAWING NUMBER

A-205

ESTABLISHED 1997

COPYRIGHT RESERVED 2014

NO.	REVISION	DATE
2		
1		

Division of Development Administration and Review
City of Pittsburgh, Department of City Planning
200 Ross Street, Third Floor
Pittsburgh, Pennsylvania 15219

HISTORIC REVIEW COMMISSION OF PITTSBURGH
Application for a Certificate of Appropriateness

- Staff Use -

DEADLINES:
Completed Applications must be submitted 15 days prior to next HRC hearing, when a hearing is required.

FEE SCHEDULE: *See attached*
Please make check payable to *Treasurer, City of Pittsburgh*

Fee Paid: ☐ $ N/A

Date Received: 4/30/14
Ward ~~*Hearing Date:*~~ 21st
Lot and Block #: 7-C-19-A

ADDRESS OF PROPERTY: 1215 W NORTH A. PGH PA 15212

HISTORIC DISTRICT: Manchester

OWNER

Name: MADELINE C MITCHUM
Address: 5176 ROSECREST PL
City, State, Zip: PGH PA 15201-1015
Phone: ( ) - Fax: ( ) -
E-MAIL: —

APPLICANT

Name: Bureau of Building Inspection - City of Pgh.
Address: 200 Ross Street
City, State, Zip: Pittsburgh, PA
Phone: ( ) - Fax: ( ) -
E-MAIL:

REQUIRED ATTACHMENTS: ☐ Drawings ☐ Photographs ☐ Renderings ☐ Site Plan ☐ Other

DETAILED DESCRIPTION OF PROPOSED WORK: TO RAZE HOUSE & GARAGE

SIGNATURE Russell Black, Owner **DATE** 4 30 14

_____, Applicant **DATE** _____

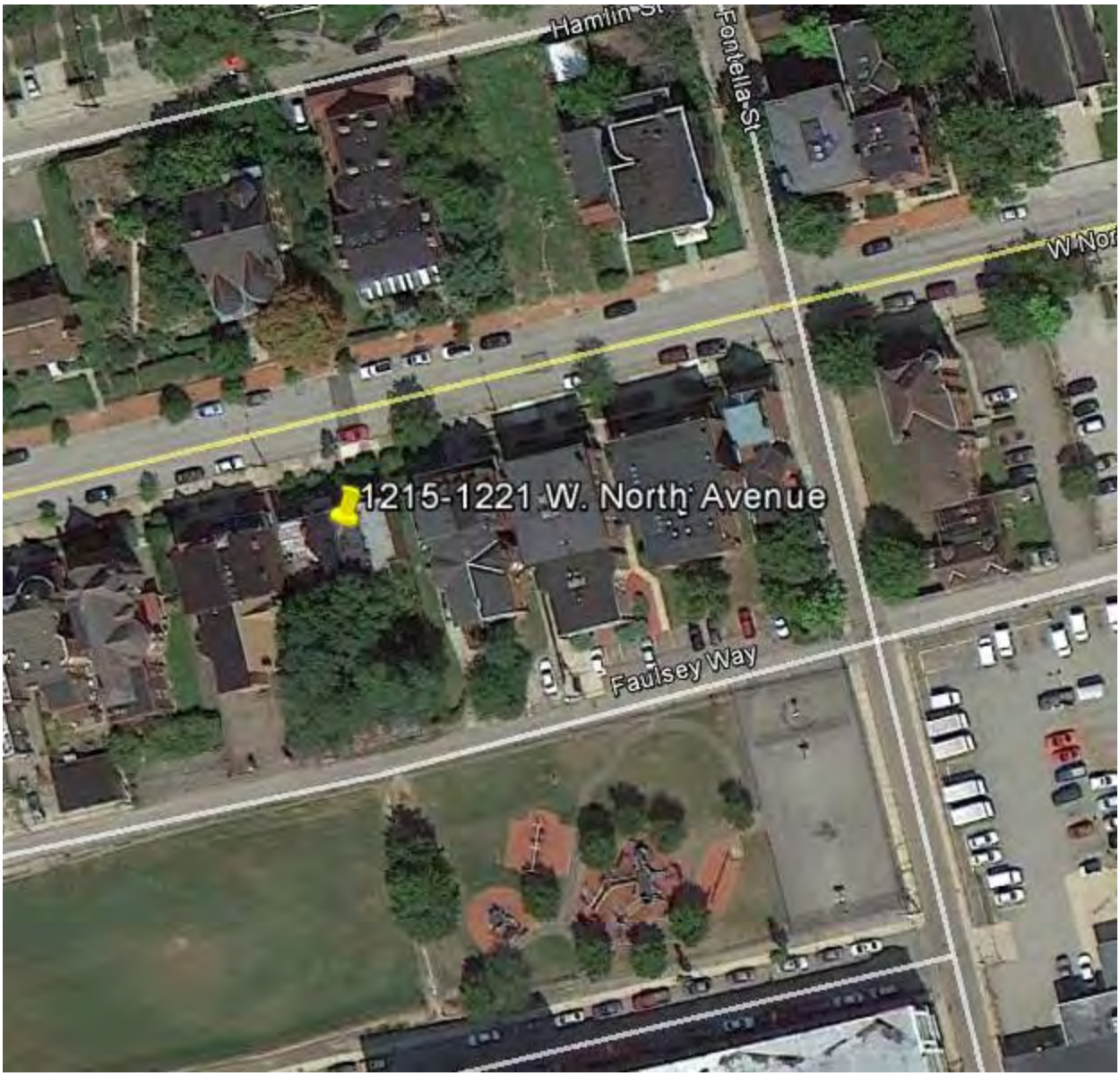
Hamlin St
Fontella St
W Nor
1215-1221 W. North Avenue
Faulsey Way

4/30/2014 1:24:52 PM

New Search | Help | Subscription Login

General Information | Building Information | Tax Information eBill / ePay | Owner History | Image | Comparables | Appeal Status | Maps

General Information

Parcel ID : 0007-C-00019-000A-00
Property Address : 1215 W NORTH AVE
PITTSBURGH, PA 15233

Municipality : 121 PITTSBURGH - 21ST WARD
Owner Name : MITCHUM MADELINE C

School District :	City Of Pittsburgh	Neighborhood Code :	12101
Tax Code :	Taxable	Recording Date :	3/30/1994
Owner Code :	Regular	Sale Price :	$25,000
State Code :	Residential	Deed Book :	9183
Use Code :	CONDEMNED/BOARDED -UP	Deed Page :	164
Homestead :	No	Abatement :	No
Farmstead :	No	Lot Area :	2,026 SQFT

2014 Full Market Value		2014 County Assessed Value	
Land Value	$27,200	Land Value	$27,20
Building Value	$10,900	Building Value	$10,90
Total Value	$38,100	Total Value	$38,10

2013 Full Market Value		2013 County Assessed Value	
Land Value	$27,200	Land Value	$27,20
Building Value	$10,900	Building Value	$10,90
Total Value	$38,100	Total Value	$38,10

Address Information

Tax Bill Mailing : CHASE/WASHINGTON MUTUAL
ATTN: BILL RECEIPT-ESCROW REPORTING
PO BOX 961252
FORT WORTH, TX 76161-

Owner Mailing : 5176 ROSECREST PL
PITTSBURGH, PA 15201-1015

Send data errors to landhelp@alleghenycounty.us. | Property Assessments HomePage | Legal Disclaimer

4/30/2014 1:25:36 PM

New Search | Help | Subscription Login

General Information | Building Information | TLI Information Bill / ePay | Owner History | Image | Comparables | Appeal Status | Maps

Images

Parcel ID : 0007-C-00019-000A-00
Property Address : 1215 W NORTH AVE
PITTSBURGH, PA 15233

Municipality : 121 PITTSBURGH - 21ST WARD
Owner Name : MITCHUM MADELINE C

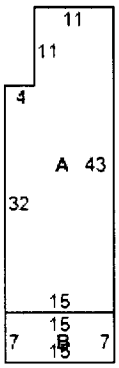

A		601 Sq. Ft.
B	Porch Masonry - Open	105 Sq. Ft.

Send data errors to landhelp@alleghenycounty.us. | Property Assessments HomePage | Legal Disclaimer

1/17/2014 16:08

1215
1215
1/17/2014 16:08

d-boy
1219
1/17/2014 16:11

1/17/2014 16:11

Division of Development Administration and Review
City of Pittsburgh, Department of City Planning
200 Ross Street, Third Floor
Pittsburgh, Pennsylvania 15219

HISTORIC REVIEW COMMISSION OF PITTSBURGH
Application for a Certificate of Appropriateness

- Staff Use -

DEADLINES:
Completed Applications must be submitted 15 days prior to next HRC hearing, when a hearing is required.

FEE SCHEDULE: *See attached*
Please make check payable to *Treasurer, City of Pittsburgh*

Fee Paid: ☐ $ N/A

Date Received: 4/30/14
~~*Hearing Date:*~~ Ward 21st
Lot and Block #: 7-C-19

ADDRESS OF PROPERTY: 1217 W NORTH A. PGH PA 15212

HISTORIC DISTRICT: Manchester

OWNER
: BULLS ROBERT LEE
BULLS ROBERTA
WILSON LUCILLE
SCOTT SHIRLEY M

Name: —
Address: 601 PRESSLEY ST APT 714
City, State, Zip: PGH PA 15212-5618
Phone: ( ) — Fax: ( ) —
E-MAIL: —

APPLICANT
Name: Bureau of Building Inspection - City of Pgh.
Address: 200 Ross Street
City, State, Zip: Pittsburgh, PA
Phone: ( ) - Fax: ( ) -
E-MAIL:

REQUIRED ATTACHMENTS: ☐ Drawings ☐ Photographs ☐ Renderings ☐ Site Plan ☐ Other

DETAILED DESCRIPTION OF PROPOSED WORK: TO RAZE HOUSE & GARAGE

SIGNATURE Russell Black, Owner **DATE** 4 30 14

_____, Applicant **DATE** _____

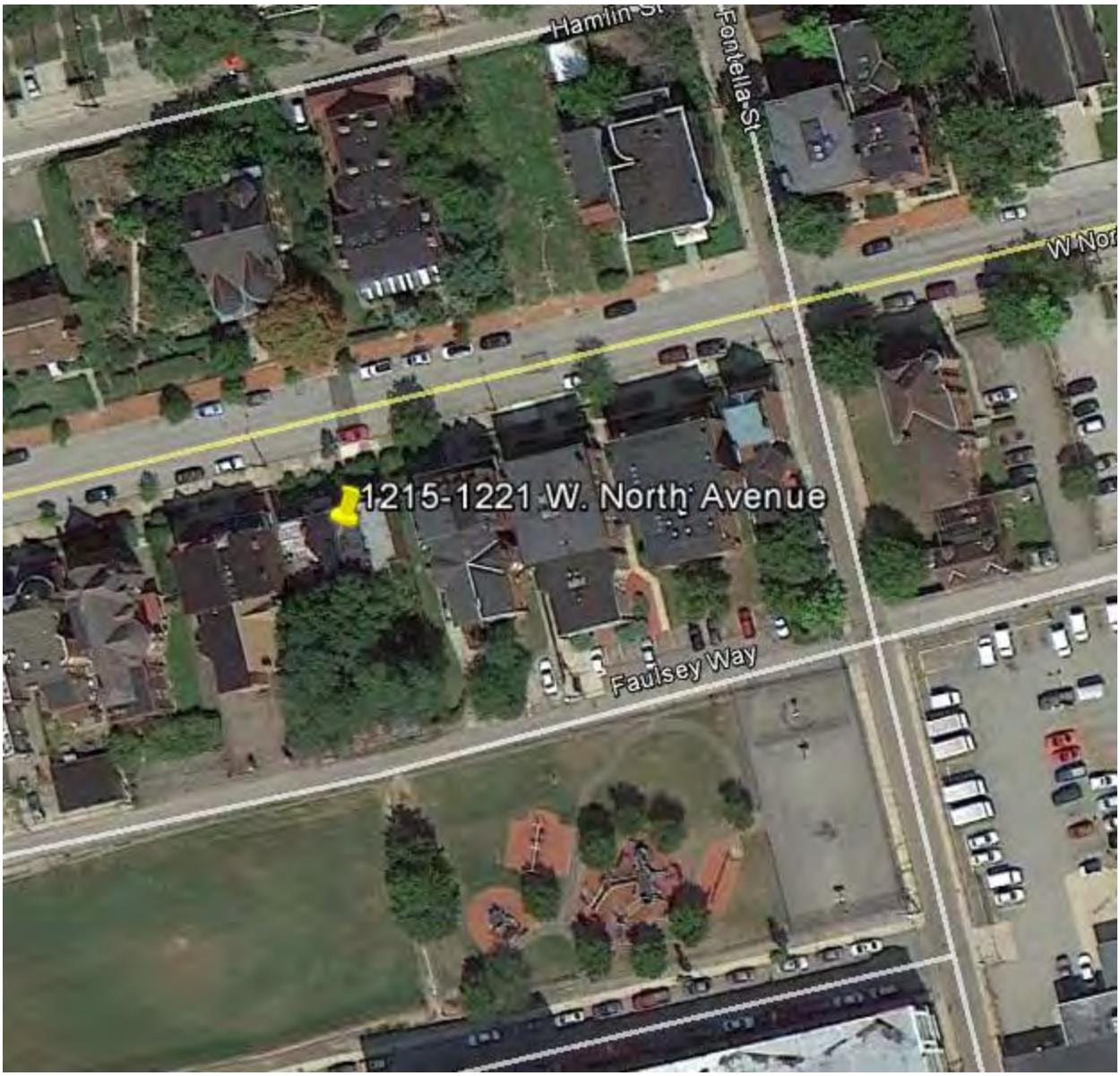
Hamlin St
Fontella St
W Nor
1215-1221 W. North Avenue
Faulsey Way

4/30/2014 1:26:09 PM

New Search | Help | Subscription Login

General Information | Building Information | Tax Information | Owner History | Image | Comparables | Appeal Status | Maps

General Information

Parcel ID : 0007-C-00019-0000-00
Property Address : 1217 W NORTH AVE
PITTSBURGH, PA 15233

Municipality : 121 PITTSBURGH - 21ST WARD
Owner Name : BULLS ROBERT LEE
BULLS ROBERTA
WILSON LUCILLE
SCOTT SHIRLEY M

School District :	City Of Pittsburgh	Neighborhood Code :	12101
Tax Code :	Taxable	Recording Date :	8/15/1994
Owner Code :	Regular	Sale Price :	$1
State Code :	Residential	Deed Book :	9282
Use Code :	ROWHOUSE	Deed Page :	609
Homestead :	No	Abatement :	No
Farmstead :	No	Lot Area :	1,956 SQFT

2014 Full Market Value		2014 County Assessed Value	
Land Value	$26,700	Land Value	$26,700
Building Value	$38,300	Building Value	$38,300
Total Value	$65,000	Total Value	$65,000

2013 Full Market Value		2013 County Assessed Value	
Land Value	$26,700	Land Value	$26,700
Building Value	$38,300	Building Value	$38,300
Total Value	$65,000	Total Value	$65,000

Address Information

Tax Bill Mailing : LUCILLE WILSON
1217 W NORTH AVE
PITTSBURGH, PA 15233-

Owner Mailing : 601 PRESSLEY ST APT 714
PITTSBURGH, PA 15212-5618

Send data errors to landhelp@alleghenycounty.us. | Property Assessments HomePage | Legal Disclaimer

4/30/2014 1:26:42 PM

New Search | Help | Subscription Login

General Information | Building Information | Tax Information | Owner History | Image | Comparables | Appeal Status | Maps

Images

Parcel ID : 0007-C-00019-0000-00
Property Address : 1217 W NORTH AVE
PITTSBURGH, PA 15233

Municipality : 121 PITTSBURGH - 21ST WARD
Owner Name : BULLS ROBERT LEE
BULLS ROBERTA
WILSON LUCILLE
SCOTT SHIRLEY M

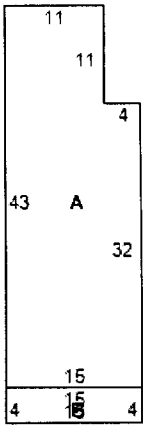

A		601 Sq. Ft.
B	Porch Masonry - Enclosed	60 Sq. Ft.

Send data errors to landhelp@alleghenycounty.us. | Property Assessments HomePage | Legal Disclaimer

Division of Development Administration and Review
City of Pittsburgh, Department of City Planning
200 Ross Street, Third Floor
Pittsburgh, Pennsylvania 15219

HISTORIC REVIEW COMMISSION OF PITTSBURGH
Application for a Certificate of Appropriateness

- Staff Use -

DEADLINES:
Completed Applications must be submitted 15 days prior to next HRC hearing, when a hearing is required.

FEE SCHEDULE: *See attached*
Please make check payable to *Treasurer, City of Pittsburgh*

Fee Paid: ☐ $ N/A

Date Received: 4/30/14
Ward ~~*Hearing Date:*~~ 21st
Lot and Block #: 7-C-18

ADDRESS OF PROPERTY: 1219 W NORTH A. PGH PA 15212

HISTORIC DISTRICT: Manchester

OWNER
Name: DARYL TROHA NATALIA KUJDYCH
Address: 1309 N FRANKLIN ST
City, State, Zip: PGH PA 15233-1332
Phone: ( ) - Fax: ( ) -
E-MAIL: —

APPLICANT
Name: Bureau of Building Inspection - City of Pgh.
Address: 200 Ross Street
City, State, Zip: Pittsburgh, PA
Phone: ( ) - Fax: ( ) -
E-MAIL:

REQUIRED ATTACHMENTS: ☐ Drawings ☐ Photographs ☐ Renderings ☐ Site Plan ☐ Other

DETAILED DESCRIPTION OF PROPOSED WORK: TO RAZE HOUSE

SIGNATURE Russell Black, Owner **DATE** 4 30 14

_____, Applicant **DATE** _____

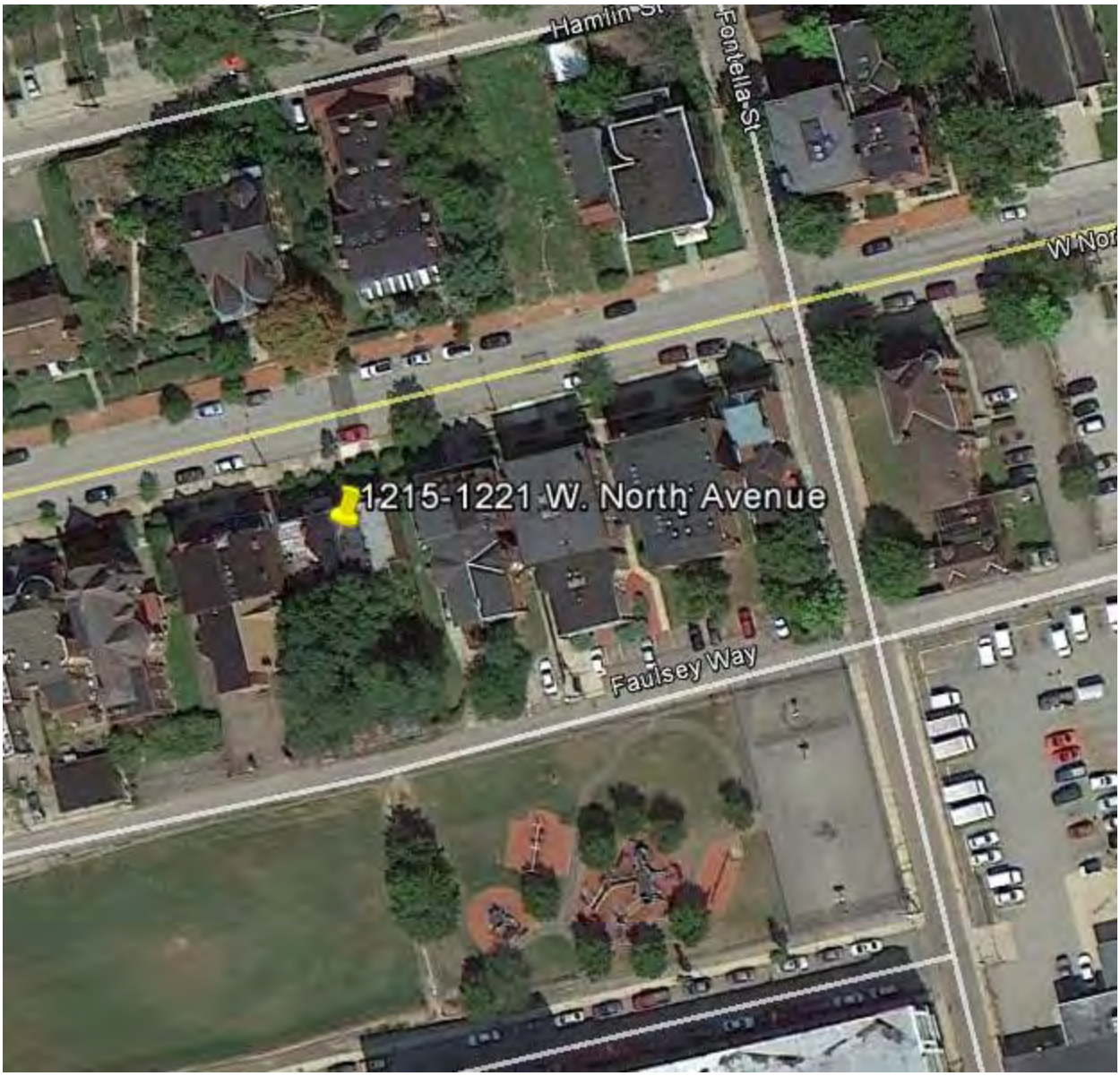
Hamlin St
Fontella St
W Nor
1215-1221 W. North Avenue
Faulsey Way

4/30/2014 1:27:00 PM

New Search | Help | Subscription Login

General Information | Building Information | Tax Information eBill / ePay | Owner History | Image | Comparables | Appeal Status | Maps

General Information

Parcel ID : 0007-C-00018-0000-00
Property Address : 1219 W NORTH AVE
PITTSBURGH, PA 15233

Municipality : 121 PITTSBURGH - 21ST WARD
Owner Name : TROHA DARYL
KUJDYCH NATALIA

School District :	City Of Pittsburgh	Neighborhood Code :	12101
Tax Code :	Taxable	Recording Date :	7/28/2005
Owner Code :	Regular	Sale Price :	$19,000
State Code :	Residential	Deed Book :	12531
Use Code :	ROWHOUSE	Deed Page :	500
Homestead :	No	Abatement :	No
Farmstead :	No	Lot Area :	1,994 SQFT

2014 Full Market Value		2014 County Assessed Value	
Land Value	$27,000	Land Value	$27,000
Building Value	$32,400	Building Value	$32,400
Total Value	$59,400	Total Value	$59,400

2013 Full Market Value		2013 County Assessed Value	
Land Value	$27,000	Land Value	$27,000
Building Value	$32,400	Building Value	$32,400
Total Value	$59,400	Total Value	$59,400

Address Information

Tax Bill Mailing : TROHA DARYL
1309 N FRANKLIN ST
PITTSBURGH, PA 15233-

Owner Mailing : 1309 N FRANKLIN ST
PITTSBURGH, PA 15233-1332

Send data errors to landhelp@alleghenycounty.us. | Property Assessments HomePage | Legal Disclaimer

4/30/2014 1:27:24 PM

New Search | Help | Subscription Login

General Information | Building Information | Tax Information eBill / ePay | Owner History | Image | Comparables | Appeal Status | Maps

Images

Parcel ID : 0007-C-00018-0000-00
Property Address : 1219 W NORTH AVE
PITTSBURGH, PA 15233

Municipality : 121 PITTSBURGH - 21ST WARD
Owner Name : TROHA DARYL
KUJDYCH NATALIA

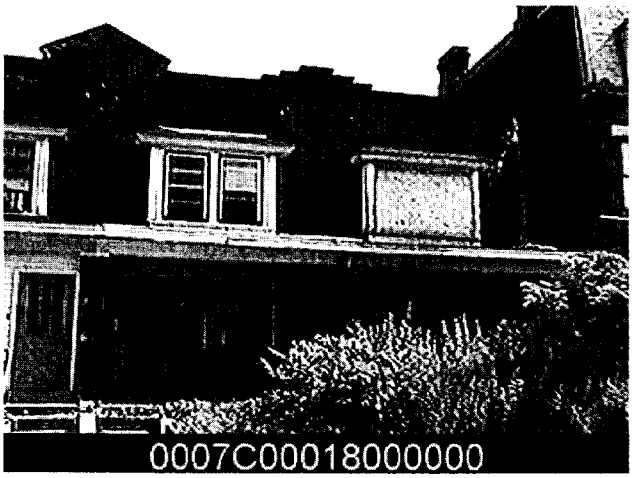

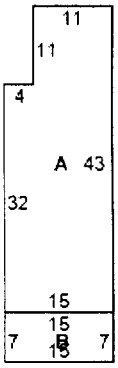

A		601 Sq. Ft.
B	Porch Masonry - Open	105 Sq. Ft.

Send data errors to landhelp@alleghenycounty.us. | Property Assessments HomePage | Legal Disclaimer

1219
1/22/2014 15:54

1/22/2014 15:58

1219
1/22/2014
15:58

FOR SAL
will renovate to s
Financing Availabl
322-4560
1219
1/22/2014 15:58

Division of Development Administration and Review
City of Pittsburgh, Department of City Planning
200 Ross Street, Third Floor
Pittsburgh, Pennsylvania 15219

HISTORIC REVIEW COMMISSION OF PITTSBURGH
Application for a Certificate of Appropriateness

- *Staff Use* -

DEADLINES:
Completed Applications must be submitted 15 days prior to next HRC hearing, when a hearing is required.

FEE SCHEDULE: *See attached*
Please make check payable to *Treasurer, City of Pittsburgh*

Fee Paid: ☐ $ _____

Date Received: 4/30/14
Ward ~~*Hearing Date:*~~ 21st
Lot and Block #: 7-C-18-A

ADDRESS OF PROPERTY: 1221 W NORTH A. PGH PA 15212

HISTORIC DISTRICT: Manchester

OWNER

Name: NATALIA KUJDYCH
Address: 1309 N FRANKLIN ST
City, State, Zip: PGH PA 15233-1332
Phone: ( ) - Fax: ( ) -
E-MAIL:

APPLICANT

Name: Bureau of Building Inspection - City of Pgh.
Address: 200 Ross Street
City, State, Zip: Pittsburgh, PA
Phone: ( ) - Fax: ( ) -
E-MAIL:

REQUIRED ATTACHMENTS: ☐ Drawings ☐ Photographs ☐ Renderings ☐ Site Plan ☐ Other

DETAILED DESCRIPTION OF PROPOSED WORK: TO RAZE House & GAR.

SIGNATURE Russell Bloch, Owner **DATE** 4 30 14

_____, Applicant **DATE** _____

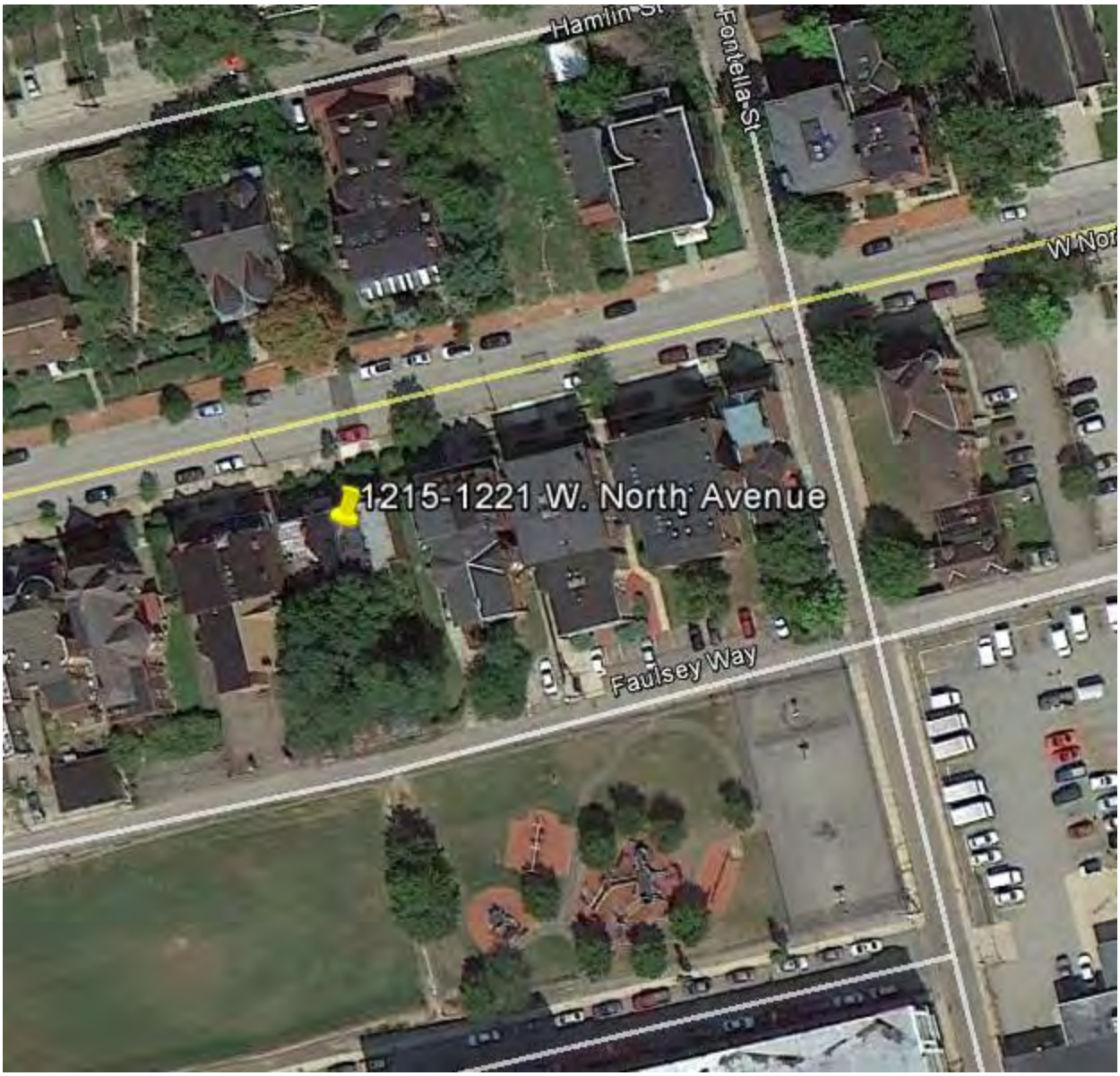
Hamlin St
Fontella St
W Nor
1215-1221 W. North Avenue
Faulsey Way

4/30/2014 1:27:41 PM

New Search | Help | Subscription Login

General Information | Building Information | Tax Information (Bill / APN) | Owner Tax History | Image | Comparables | Appeal Information | Maps

General Information

Parcel ID : 0007-C-00018-000A-00
Property Address : 1221 W NORTH AVE
PITTSBURGH, PA 15233

Municipality : 121 PITTSBURGH - 21ST WARD
Owner Name : KUJDYCH NATALIA

School District :	City Of Pittsburgh	Neighborhood Code :	12101
Tax Code :	Taxable	Recording Date :	5/12/2009
Owner Code :	Regular	Sale Price :	$8,000
State Code :	Residential	Deed Book :	13924
Use Code :	CONDEMNED/BOARDED -UP	Deed Page :	314
Homestead :	No	Abatement :	No
Farmstead :	No	Lot Area :	2,425 SQFT

2014 Full Market Value		2014 County Assessed Value	
Land Value	$29,600	Land Value	$29,60
Building Value	$4,500	Building Value	$4,50
Total Value	$34,100	Total Value	$34,10

2013 Full Market Value		2013 County Assessed Value	
Land Value	$29,600	Land Value	$29,60
Building Value	$4,500	Building Value	$4,50
Total Value	$34,100	Total Value	$34,10

Address Information

Tax Bill Mailing : KUJDYCH NATALIA
1309 N FRANKLIN ST
PITTSBURGH, PA 15233-1332

Owner Mailing : 1309 N FRANKLIN ST
PITTSBURGH, PA 15233-1332

Send data errors to landhelp@alleghenycounty.us. | Property Assessments HomePage | Legal Disclaimer

4/30/2014 1:28:04 PM

New Search | Help | Subscription Login

General Information | Building Information | Tax Information eBill / ePay | Owner History | Image | Comparables | Appeal Status | Maps

Images

Parcel ID : 0007-C-00018-000A-00
Property Address : 1221 W NORTH AVE
PITTSBURGH, PA 15233

Municipality : 121 PITTSBURGH - 21ST WARD
Owner Name : KUJDYCH NATALIA

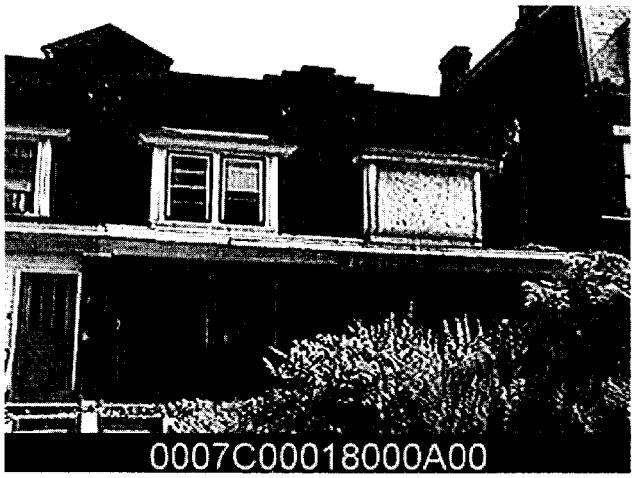

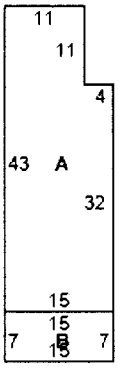

A		601 Sq. Ft.
B	Porch Masonry - Open	105 Sq. Ft.

Send data errors to landhelp@alleghenycounty.us. | Property Assessments HomePage | Legal Disclaimer

HTF-3531