CITY OF PITTSBURGH
DEPARTMENT OF CITY PLANNING

ZONING & DEVELOPMENT REVIEW
ZBA REQUESTS SUPPLEMENT

Posse #DCP-ZDR-2020-06505

A. PROJECT INFORMATION

1. APPLICATION IS: ☒ Development Project ☐ Protest Appeal

2. STAFF REVIEW DATE: 7/9/2020

3. SITE INFORMATION

Development Address: 233 Spahr Street

Parcel ID(s)/Lot-and-Block Number(s): 84-F-324 and 84-F-326

Project Description: New construction of two story office structure

3. CONTACT INFORMATION

Applicant Name: Steven Hawkins

Applicant Contact (phone and email): sgharcht@aol.com

B. ZBA HEARING INFORMATION

Zone Case #155 of 2020

Date of Hearing: August 6, 2020 Time of Hearing: 10:00 a.m.

Zoning Designation: RM-M

Neighborhood: Shadyside

Zoning Specialist: William Gregory

C. ZBA REQUESTS

Type of Request Variance: Code Section: 911.02

Description: Office (general) is not a permitted use in the RM-M Zone

Type of Request: Variance Code Section: 903.03.C.2

Description: Minimum interior side setback is 10'; 0' requested

Parcel ID : 0084-F-00324-0000-00
Property Address : 233 -237 SPAHR ST
PITTSBURGH, PA 15232

Municipality : 107 7th Ward - PITTSBURGH
Owner Name : SOBOL BERNARD H & EVELYN B (W)

Data displayed on this map is for informational purposes only. It is not survey accurate and is meant to only show a representation of property lines.

Print

Note: This button uses pop-ups. Please click help button for further printing instructions.

Parcel ID : 0084-F-00324-0000-00

Property Address : 233 -237 SPAHR ST
PITTSBURGH, PA 15232

Municipality : 107 7th Ward - PITTSBURGH

Owner Name : SOBOL BERNARD H & EVELYN B (W)

Exterior from Spahr (to Northeast)

View from T&D (to Southeast_

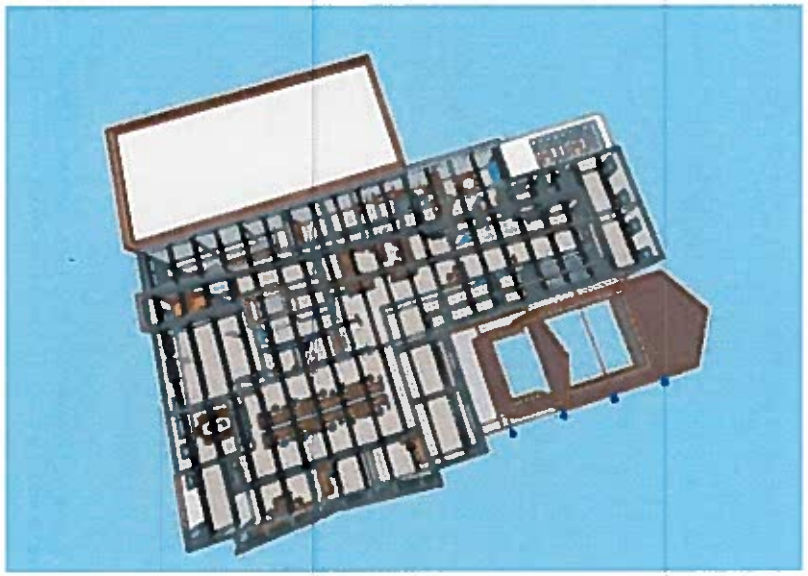

Aerial

Front Elevation

CONSULTANTS

S: [illegible]
M: [illegible]
E: [illegible]
P: [illegible]
Sprinkler: [illegible]

Joel Farkas
FARKAS ASSOCIATES

LOBOS MANAGEMENT, LLC - OFFICES
SECOND FLOOR RENO. and ADDITION / 233 Spahr St.

DEVELOPER: LOBOS MANAGEMENT, LLC
233 Spahr Street
Pittsburgh, PA 15232

Phone: [illegible]
Email: [illegible]

DRAWINGS
3D VIEWS
EXTERIOR

REVISIONS

DATE MAY 14, 2019
JOB No.
SHEET No.
A-9.2

PRINTED [illegible]

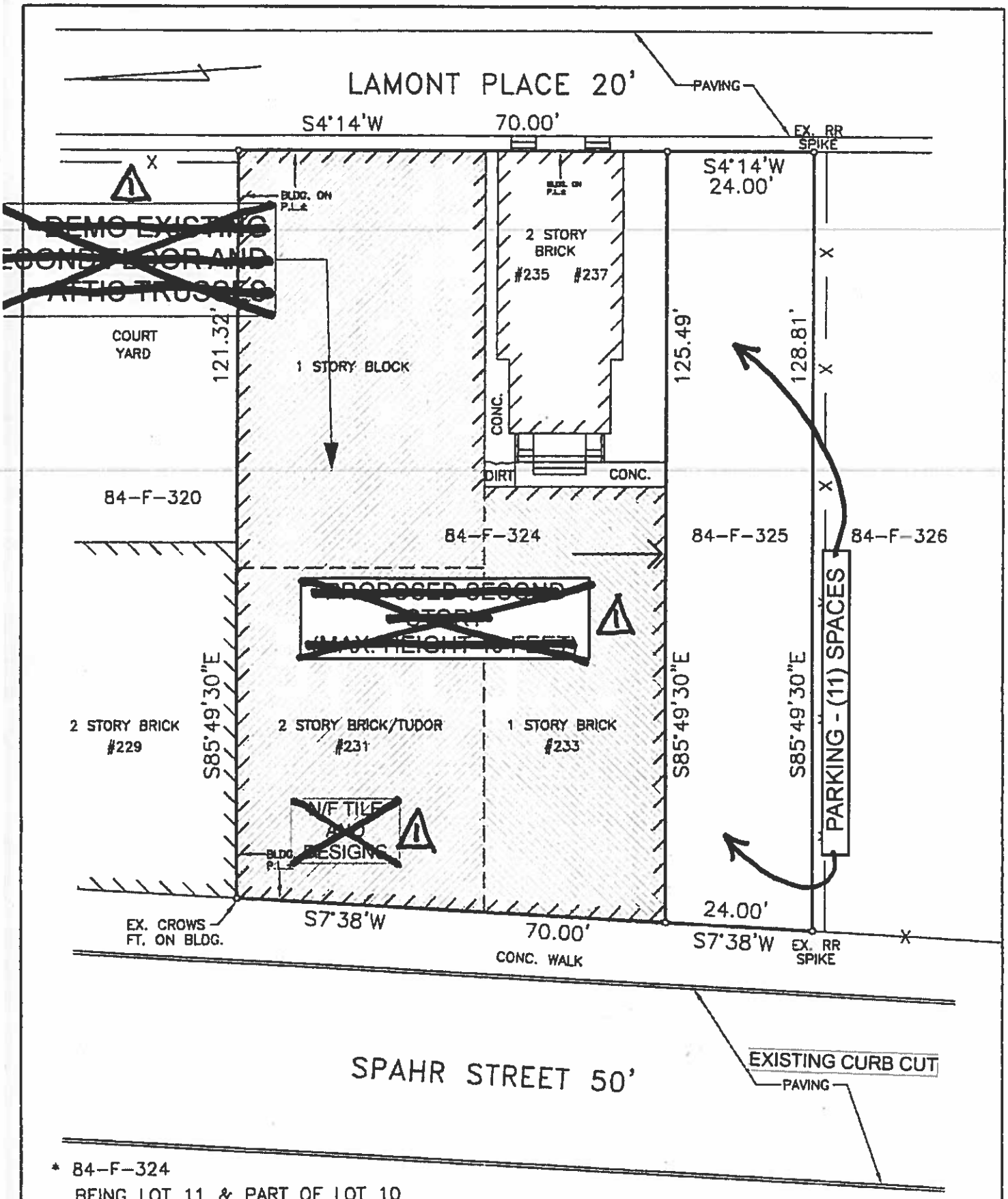

* 84-F-324
BEING LOT 11 & PART OF LOT 10
IN THE J. M. DOOLITTLE'S PLAN OF LOTS
P.B.V. 9 PG. 116

** 84-F-325
BEING PART OF LOT 9 IN THE
EPHRIAM SPAHR'S PLAN OF LOTS

PLAN OF PROPERTY

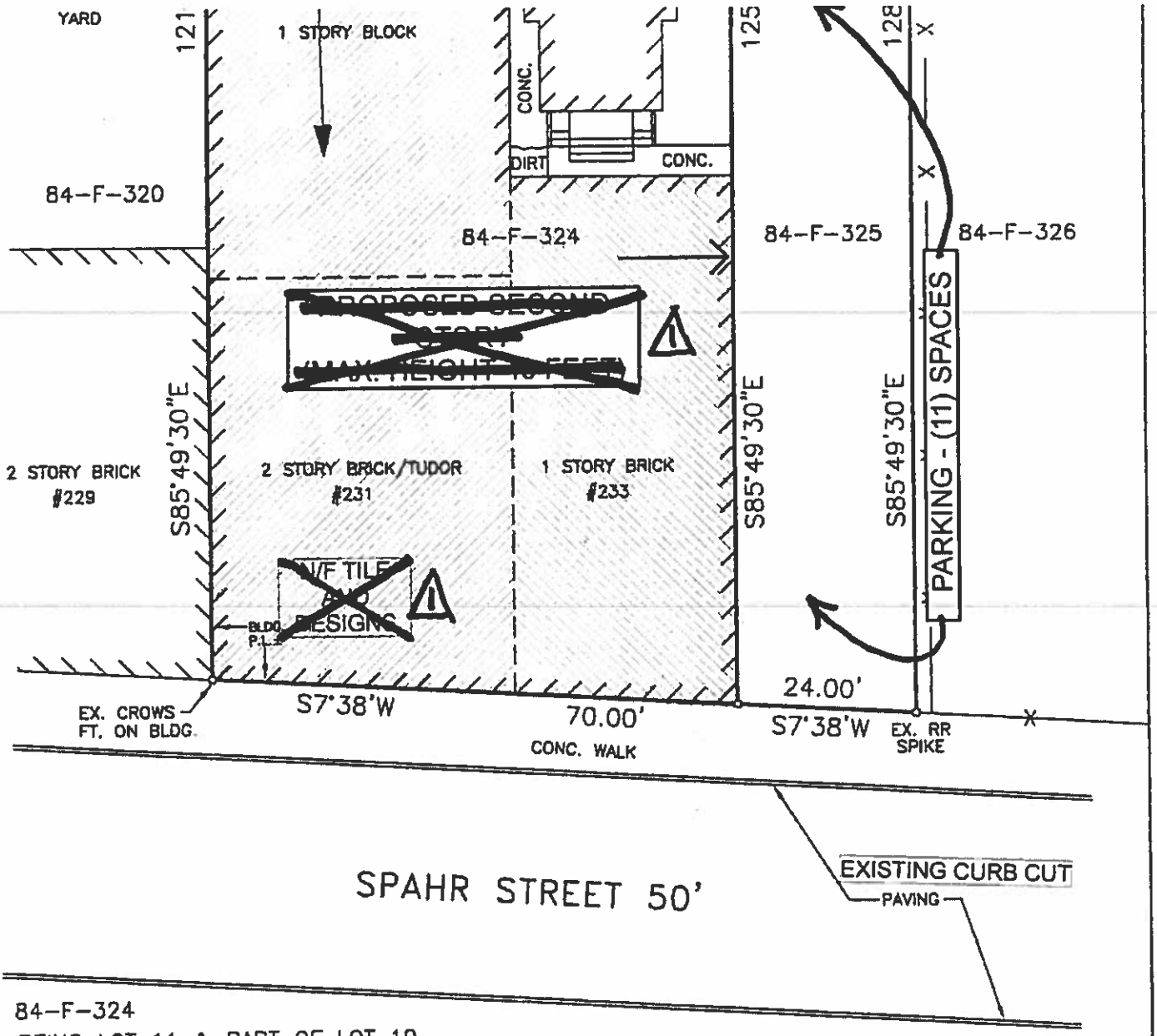

* 84-F-324
BEING LOT 11 & PART OF LOT 10
IN THE J. M. DOOLITTLE'S PLAN OF LOTS
P.B.V. 9 PG. 116

** 84-F-325
BEING PART OF LOT 9 IN THE
EPHRIAM SPAHR'S PLAN OF LOTS
P.B.V. 4 PG. 295

PLAN OF PROPERTY

SITUATE IN

7TH WARD–CITY OF PITTSBURGH
ALLEGHENY COUNTY, PA

MADE FOR

BERNARD H. & EVELYN B. SOBOL

1 REVISED 6·30·20
BY STEVEN G. HAWKINS/
ARCHITECTS. NOTES
BY FARKAS ASSOCIATES
DELETED.

SCALE: 1"=20' DATE: AUGUST 17, 2009

J.R. GALES & ASSOCIATES, INC.
2704 Brownsville Road
Pittsburgh, Pennsylvania 15227
Phone: 412-885-8885 Fax: 412-885-1320

09-103074

S.B. NO. 755 PG. 48,49

ge

LOBOS MANAGEMENT RENOVATION & ADDITION

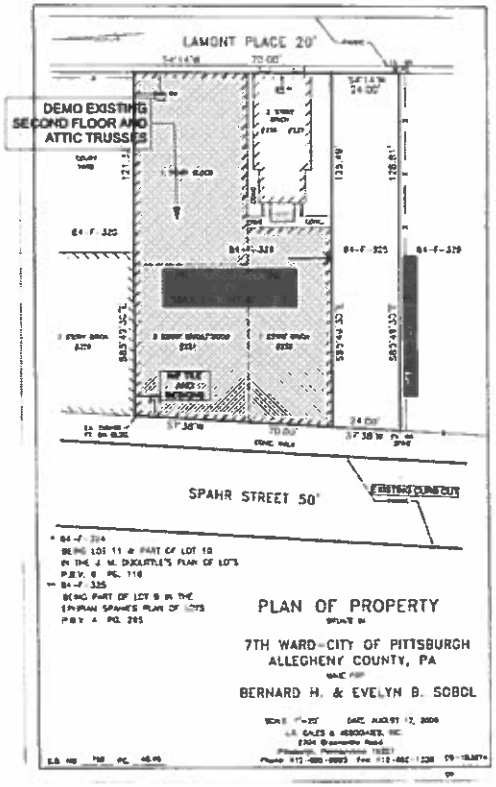

Spahr Survey_JD Gales_110718

LOCATION MAP

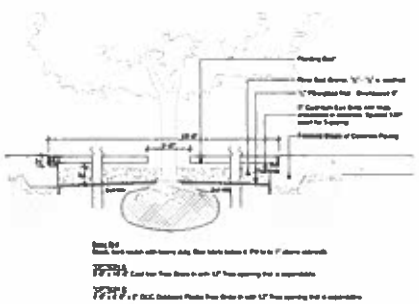

TREE PLANTING DETAIL

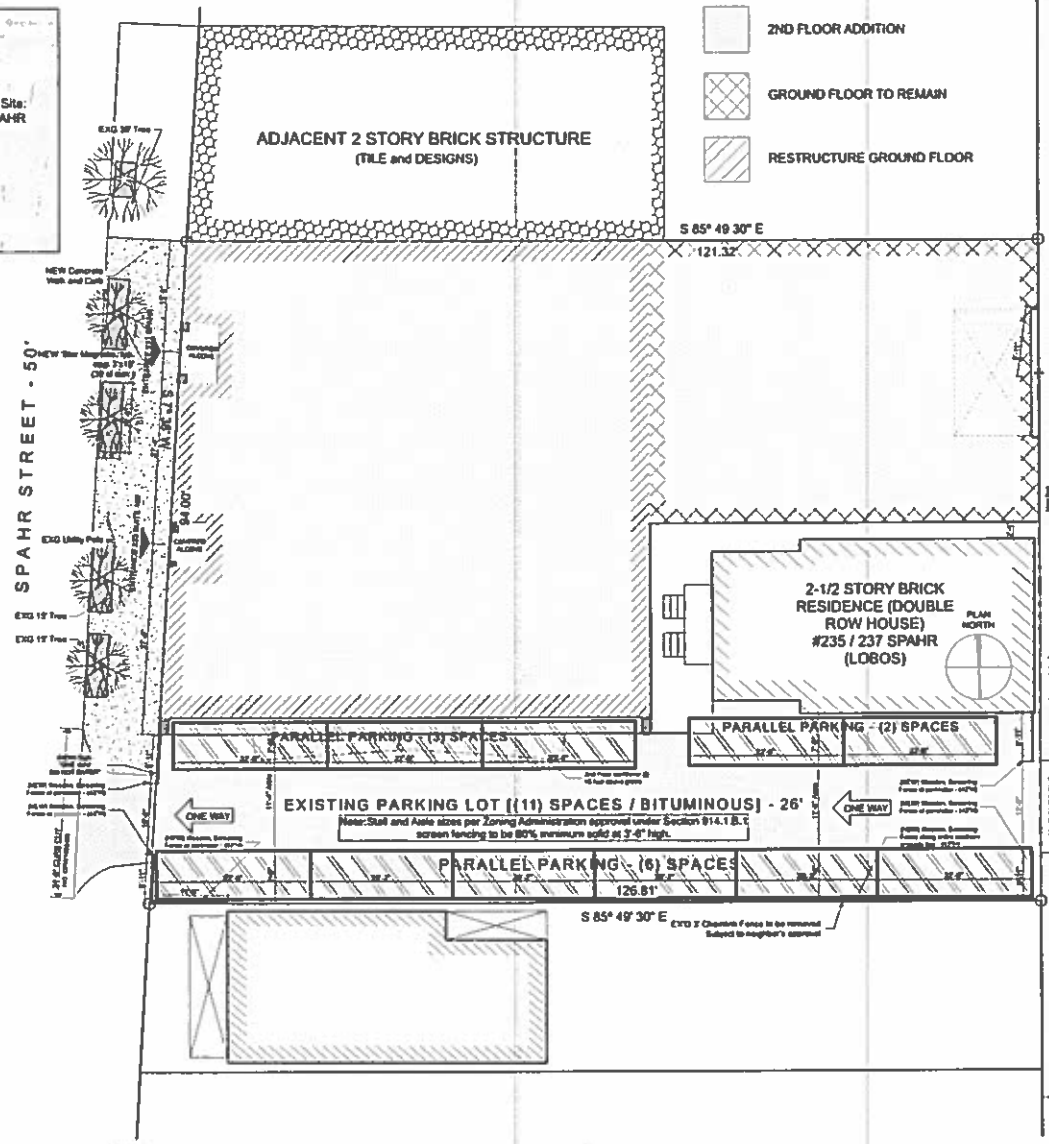

1 SITE PLAN

CONSULTANTS

FARKAS ASSOCIATES

LOBOS MANAGEMENT, LLC - OFFICES
SECOND FLOOR RENO. and ADDITION / 233 Spahr St.

DEVELOPER: LOBOS MANAGEMENT, LLC
233 Spahr Street
Pittsburgh, PA 15232

DRAWINGS
SITE PLAN
SURVEY
LOCATION
MAP

REVISIONS

DATE MAY 14, 2019
JOB No.
SHEET No.
A-1.0

PRINTED: 5/15/19