CITY OF PITTSBURGH
DEPARTMENT OF CITY PLANNING

ZONING & DEVELOPMENT REVIEW
ZBA REQUESTS SUPPLEMENT
Posse# DCP-ZDR-2020- 02409

A. PROJECT INFORMATION

1. APPLICATION IS: ☒ Development Project ☐ Protest Appeal

2. STAFF REVIEW DATE:

3. SITE INFORMATION

Development Address: 105 40th St

Parcel ID(s)/Lot-and-Block Number(s): 49-A-320

Project Description: Giant Eagle wall sign at TechMill

3. CONTACT INFORMATION

Applicant Name: Bill Sittig 412-402-4000 wsittig@sittigcortese.com

Applicant Contact (phone and email):

B. ZBA HEARING INFORMATION

Zone Case #83. of 2020

Date of Hearing: June 18,2020

Time of Hearing: 10:00 a.m.

Zoning Designation: RIV-IMU

Neighborhood: Central Lawrenceville

Zoning Specialist: Svetlana Ipatova

C. ZBA REQUESTS

Type of Request: Variance

Code Section: 919.03.M.5 (a)

Description: maximum 80sq. ft. in sign face are permitted and 129sq. ft. requested

Maximum height of 20ft above grade permitted and 53'5" requested

Type of Request: Variance

Code Section:

Description:

Division of Development Administration and Review
City of Pittsburgh, Department of City Planning
200 Ross Street, Third Floor
Pittsburgh, Pennsylvania 15219

DCP-ZBR-2020-02409

Zoning Board of Adjustment Application

Address of Subject Property: 49-A-320 105 40th St **Date:** 3/18/20

Zone Case # 83 **of 20**20 **Zoning Designation:** RIV-1MU

Date of Hearing: _____ **Time of Hearing:** _____

Neighborhood: _____ **Ward:** 9 **RCO:** _____

Meeting Required: Yes ☐ No ☑

Applicant's Name: _____ **Signature:** _____

Paid: $ _____ **Check #** _____ **Zoning Specialist:** _____
(ZBA application filing fees are not refundable)

Variance ☐ **Special Exception** ☐ **Code Section #** _____

A Giant Eagle, Inc. wall sign at TechMill. The following variances are requested from the maximum sign face area and maximum height provisions of Section 919.03.M.5(a):

1. Maximum 80 sq. ft. in sign face permitted and 129 sq. ft. requested.
2. Maximum height of 20 ft. above grade permitted and 53'5" requested.

Description: _____

Variance ☐ **Special Exception** ☐ **Code Section #** _____

Description: _____

Variance ☐ **Special Exception** ☐ **Code Section #** _____

Description: _____

Division of Development Administration and Review
City of Pittsburgh, Department of City Planning
200 Ross Street, Third Floor
Pittsburgh, Pennsylvania 15219

ZONING BOARD OF ADJUSTMENT

Date of Hearing: December 12, 2019
Date of Decision: February 6, 2020

Zone Case: 255 of 2019
Address: 105 40th Street
Lot & Block: 49-A-320
Zoning Districts: RIV-IMU
Ward: 9
Neighborhood: Central Lawrenceville

Owner: Techmill 41 LP
Applicant: Bill Sittig

Request: New 272.125 square foot wall mounted business ID sign.

Variance	919.03.M.5(a)	Maximum 80sq. ft. in sign face area permitted and 272.125sq. ft. requested Maximum height 20ft above grade permitted and 58' 1 ¼" requested

Appearances:

Applicant: Bill Sittig, Pat Avolio, Alexander J Simakes

Findings of Fact:

1. The Subject Property is lot 49-A-320, 105 40th Street, located at the corner of Willow Street and 40th Street in the RIV-IMU (Riverfront Industrial Mixed Use) Zoning District in Central Lawrenceville.

2. The Subject Property is adjacent to the Allegheny Valley Railroad and the elevated roadway of the 40th Street Bridge.

3. The Applicant is constructing a four-story office building on the Subject Property.

4. As part of the development, the Applicant proposes to locate a 272.125 square foot wall mounted sign just beneath the parapet wall of the building, 58' 1 ¼" above grade, on the 40th Street side of the building.

5. The Applicant submitted renderings of the proposed signage. The proposed signage would include the text "Giant Eagle" followed by a series of depictions of baby eagles which the Applicant testified are consistent with Giant Eagle's new corporate logo and branding campaign.

6. The RIV-IMU Zoning District sign standards would allow one 80 square foot wall mounted sign 20 feet from grade on the building's approximately 225 foot long southwestern façade.

7. The Applicant offered testimony that the height of the sign is necessary to provide visibility and wayfinding to the building. The southwest building frontage will face the elevated right-of-way of the 40th Street Bridge. The Applicant submitted evidence that the sign has to be at the proposed height to be visible from the 40th Street Bridge and that a sign complying with the RIV-IMU height standard would only be visible from grade on 40th street.

8. The Applicant offered testimony that the size of the sign was necessary as part of the company's branding campaign. The building will be an office for Giant Eagle and headquarters for their technology division. Giant Eagle designed the logo to differentiate the building from their chain of grocery stores. Furthermore, the size and placement of the sign was designed to complement the building's articulated façade. The sign would span two off-set portions of the façade which would improve visibility from Lawrenceville.

9. No parties appeared at the hearing to oppose the proposed signs.

Conclusions of Law:

1. The Applicant seeks variances from Section 919.03.M.5(a), the Code's limitations for the maximum height and size of wall mounted signs. Per Code, the Applicant is permitted to install a sign that is 80 square feet in sign face area and to mount that sign 20 feet above grade by right. The Applicant's proposed sign would require significant variances from the Code. The Applicant proposes a sign measuring 272.125 square feet in sign face area and to mount that sign 58' and 1 ¼" above grade.

2. Section 922.09.E sets forth the general standards that the Board is to consider regarding variances, including demonstrating the existence of a hardship associated with the property that precludes strict compliance with the Code's requirements and demonstrating that the variance proposed is the minimum variance that would afford relief, with the least modification of the Code requirement at issue. See *Marshall v. City of Philadelphia and Zoning Bd. of Adj.*, 97 A.3d 323, 329 (Pa. 2014); *Hertzberg v. Zoning Bd. of Adj. of the City of Pittsburgh*, 721 A.2d 43 (Pa. 1998), citing *Allegheny West Civic Council v. Zoning Bd. of Adj. of the City of Pittsburgh*, 689 A.2d 225 (Pa. 1997).

3. In *Hertzberg*, the court recognized that a less restrictive standard is appropriate for dimensional variances, which require only for a reasonable adjustment of the zoning regulations to accommodate a use of property that is permitted. *Hertzberg*, 721 A.2d at 47-48. However, the reduced burden for dimensional variances does not equate to a "carte blanche" right to use property for the applicant's preferred design scheme. *See, e.g., Yeager v. Zoning Hearing Bd. of the City of Allentown*, 779 A.2d 595, 598 (Pa. Commw. Ct. 2001). Some evidence of a hardship is required.

4. The Board concludes that the magnitude of the variance requested with respect to sign face area does not seem to represent the minimum variance that would afford relief. Accordingly, consistent with the evidence and testimony presented and the applicable legal standards governing dimensional variances, the Board concludes that the Applicant's request to exceed the permitted 80 square feet in sign face area should be DENIED. The Board renders this decision without prejudice to the Applicant's right to present a revised proposal that does not require such significant relief.

5. With respect to the Applicant's request for relief from the minimum mounting height requirement of the Code, the Applicant submitted substantial and credible evidence with respect to unique conditions of the property and the building, in the context of the surrounding roadways, railways and topography, and the hardship that results from strict compliance with the height requirements for the proposed sign.

6. Consistent with the evidence and testimony presented and the applicable legal standards governing dimensional variances, the Board concludes that the Applicant's request to mount the proposed sign at 58' 1 ¼'" should be APPROVED

Decision: **The Applicant's request for a variance from Code Section 919.03.M.5(a) with respect to sign face area is hereby DENIED without prejudice to Applicant's right to present a revised proposal to the Board that does not require such significant relief. The Applicant's request for a variance with respect to the minimum mounting height of the proposed sign is APPROVED.**

[RECUSED]
Alice B. Mitinger, *Chair*

For **LaShawn Burton-Faulk**

For **John J. Richardson**

Parcel ID : 0049-A-00320-0000-00

Property Address : 105 40TH ST
PITTSBURGH, PA 15201

Municipality : 109 9th Ward - PITTSBURGH

Owner Name : TECHMILL 41 LP

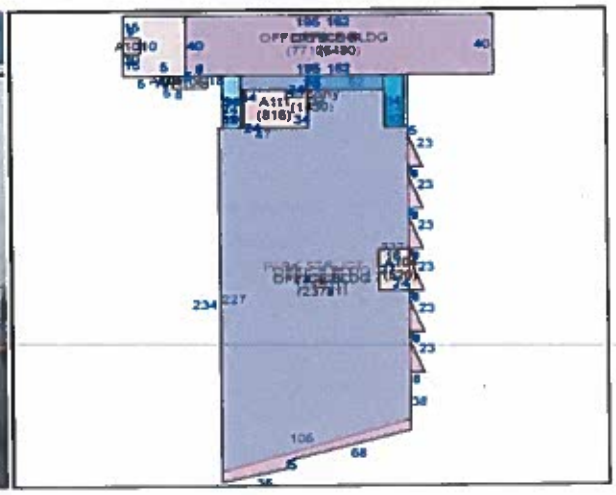

Parcel ID : 0049-A-00320-0000-00
Property Address : 105 40TH ST
PITTSBURGH, PA 15201

Municipality : 109 9th Ward - PITTSBURGH
Owner Name : TECHMILL 41 LP

Data displayed on this map is for informational purposes only. It is not survey accurate and is meant to only show a representation of property lines.

Print

Note: This button uses pop-ups. Please click help button for further printing instructions.

DCP-ZDR-2020-02409: 105 40TH ST

Seifert, Caroline <caroline.seifert@pittsburghpa.gov>
Tue 3/17/2020 10:56 AM

To: wsittig@sittigcortese.com <wsittig@sittigcortese.com>
Cc: Ipatova, Svetlana <svetlana.ipatova@pittsburghpa.gov>

Hi Bill,

I am currently reviewing the zoning application for the signs at 105 40th St.

A site plan will be required as part of the application. This site plan should demonstrate the location of the signs on the property, as well as the property lines and existing structures.

The plans are showing the large "TechMill 41" sign. If that sign is not part of this application, please remove it from the drawings.

Can you provide some detail as to the changing colors on the birds? How frequently would the colors be changing?

I've copied in Lana so she can start scheduling you for a ZBA hearing.
Variance Requests:
919.03.M.5 - Maximum 80 SF permitted, 129 SF proposed
919.03.M.5 - Maximum height above grade permitted, 20', 53'5" proposed

Best,

Caroline Seifert
Zoning Specialist
Department of City Planning
Division of Zoning & Development Review

New! Please review the checklist here to determine whether a Zoning and Development Review Application (ZDR) is required. If a ZDR is required, the checklist will determine whether a stamped site plan is required.

The OneStopPGH online portal is now open! You are able to create a User Profile, which will allow you to initiate applications, pay fees, and upload your attachments online. You can use the same User Profile for all of your applications. Videos are available at OneStopPGH to assist with frequently asked questions about this process. Please note that the Zoning and Development Review Office will be temporarily closed to the public starting March 16, 2020.

Parcel ID : 0049-A-00320-0000-00
Property Address : 105 40TH ST
PITTSBURGH, PA 15201

Municipality : 109 9th Ward - PITTSBURGH
Owner Name : TECHMILL 41 LP

Data displayed on this map is for informational purposes only. It is not survey accurate and is meant to only show a representation of property lines.

Print

Note: This button uses pop-ups. Please click help button for further printing instructions.

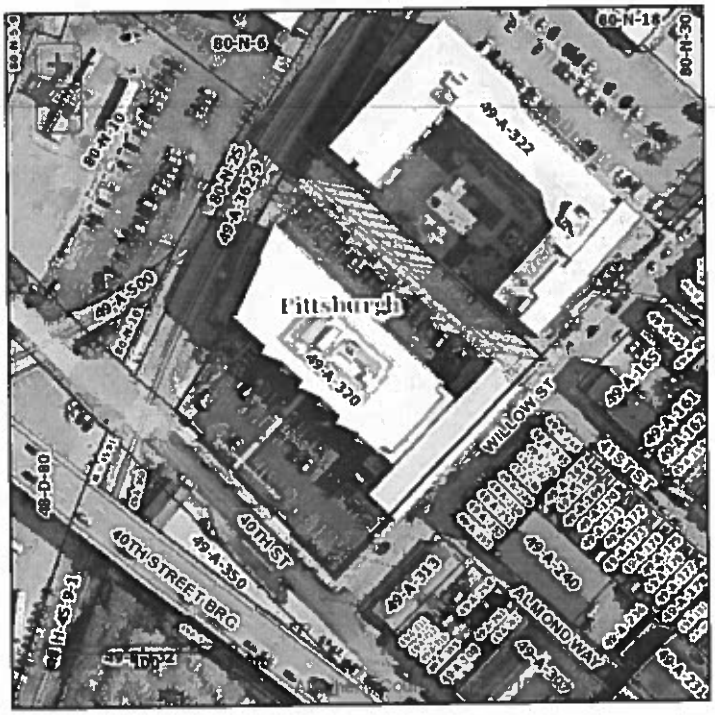

CITY OF PITTSBURGH
DEPARTMENT OF CITY PLANNING

FLOOD PLAIN OVERLAY DEVELOPMENT APPLICATION

SECTION I (TO BE COMPLETED BY APPLICANT)

A. PROJECT INFORMATION

1. APPLICATION TYPE: ☒ New application ☐ Amendment/Addition to existing application

2. SITE INFORMATION

Development Address(es): 105 40th Street, Pittsburgh, PA 15201

Parcel ID(s) or Block-and-Lot Number(s): 49-A-320

Does the site have a basement as defined in 906.02.J.2 (an area having its floor below ground level on all sides)? ☐ Yes ☐ No

Describe the proposed development in detail (include changes to use, new construction, renovations, accessory structures and uses, etc.; if development is only in a portion of the building identify which areas):

Single wall sign having an area of 129 sq. feet and height above grade of 53'5".

3. DEVELOPMENT (***Please check all that apply***)

Type of Use:

- ☐ Residential (1 to 4 families)
- ☐ Residential (More than 4 families)
- ☐ Non-Residential:
  - ☐ Elevated
  - ☐ Flood proofed
- ☐ Mixed Use (Residential & Non-Residential)
- ☐ Manufactured (mobile) Home
- ☐ Accessory Structure
  - ☐ Anchored
- ☒ Other

Type of Activity:

- ☐ Alteration of Existing Structure (Interior)
- ☐ Alteration of Existing Structure (Exterior)
- ☐ Addition to Existing Structure
- ☐ Relocation of Existing Structure
- ☐ New Structure (Primary)
- ☐ New Structure (Accessory)
- ☐ Demolition of Existing Structure
- ☐ Replacement of Existing Structure

Other Development Activities:

☐ Drilling	☐ Excavation ONLY	☐ Placement of fill material
☐ Dredging	☐ Watercourse alteration	☐ Drainage improvement (incl. culvert work)
☐ Clearing	☐ Removing trees	☐ Individual water or sewer system
☐ Grading	☐ Planting trees	☐ Roadway or bridge construction
☐ Mining	☐ Parking	☐ Paving or concrete on grade
☐ Fence	☐ Vehicle Storage	☐ Storage of equipment and materials
☒ Sign	☐ Recreational vehicle	☐ Temporary event or seasonal uses
☐ HVAC	☐ Electrical	☐ Other development_____

4. COST OF DEVELOPMENT: (*Please check applicable source and* ***attach copy of document***)

Current Market Value of Structure: _____

☐ Allegheny County Assessment (structure only) or ☐ Certified Appraisal (structure value only)

Project / Job Value: _____

☐ Itemized costs of materials and labor, or estimates of materials and labor that are prepared by licensed contractors or professional construction cost estimators

B. CONTACT INFORMATION

Owner Name: Techmill 41, LP

Owner Address: 115 41st Street, Pittsburgh, PA 15201

Owner Contact (phone and email): _____

Is the owner also the applicant? ☐ Yes ☒ No

If No, complete applicant info below:

Applicant Name: Giant Eagle, Inc.

Applicant Address: c/o William R. Sittig, Jr., Esq. 1500 Frick Bldg, Pgh., PA 15219

Applicant Contact (phone and email): 412-402-4000 / wsittig@sittigcortese.com

My signature (below) certifies that all information provided as part of this application is correct and that I am authorized by the legal property owner to make this application.

Applicant or Owner Signature: _____ Date: 3-4-20

C. ADDITIONAL DOCUMENTS AS REQUIRED BY CODE

For any project with new development (including accessory structures) or with improvement exceeding 50% of the structure(s) pre-improvement market value, a site plan is required with the following information:

- **A plan of the entire site, clearly and legibly drawn at a standard architect's or engineer's scale (being a scale of one (1) inch equal to one hundred (100) feet or less), showing the following:**
  - **North arrow, scale, and date;**
  - **Topographic contour lines;**
  - **The location of all existing and proposed buildings, structures, and other improvements, including the location of any existing or proposed elements;**
  - **Subdivision;**
  - **The location of all existing streets, drives, and other access ways; and**
  - **The location of any existing bodies of water or watercourses and Special Flood Hazard areas as delineated by current FEMA Flood Insurance Rate Maps, including the floodway, if available.**

NOTE: FOR ALL PROJECTS THAT ARE CONSIDERED A "SIGNIFICANT DEVELOPMENT," THE FLOODPLAIN ADMINISTRATOR WILL REQUIRE ADDITIONAL DOCUMENTATION BASED ON THE LOCATION AND SCOPE OF WORK TO DETERMINE COMPLIANCE WITH THE FLOODPLAIN REGULATIONS.
SEE PITTSBURGHPA.GOV/DCP/ZONING/FLOODPLAIN FOR MORE INFORMATION.

SECTION II (TO BE COMPLETED BY FLOODPLAIN ADMINISTRATOR)

A. SPECIAL HAZARD FLOOD AREA INFORMATION

1. FIRM map panel (number and suffix):_____
2. The date on the FIRM is: _____
3. The parcel of the development is located in Flood Zone (check all that apply):

   ☐ None, ***compliance with Flood Plain Overlay standards is not required, skip to Section III.***
   ☐ Parcel is in SFHA, but development is not, ***compliance with Flood Plain Overlay standards is not required, skip to Section III.***
   ☐ A, ***proceed to #4.***
   ☐ AE, ***proceed to #4.***
   ☐ AE/Floodway, ***a No Rise Certificate is necessary before proceeding to #4.***

4. Does the proposed development constitute Substantial Improvement / Substantial Damage repair or a New Structure?

   ☐ NO, ***compliance with Flood Plain Overlay standards is not required, skip to Section III.***
   ☐ YES, ***proceed to #5, the project must comply with Flood Plain Overlay standards.***

5. Base flood elevation at the site: _____ North American Vertical Datum of 1988 (NAVD 88).
6. Source of the base flood elevation (BFE):

   ☐ Flood Insurance Study Profile #_____
   ☐ Other sources of the BFE (If Flood Zone A):_____

7. Proposed lowest floor elevation (including basement and utilities): _____ North American Vertical Datum of 1988 (NAVD 88). (This elevation must be greater than the BFE. For non-residential structures, floodproofing may be used for protection. See ordinance for details.)
8. Other: _____

SECTION III (TO BE COMPLETED BY FLOODPLAIN ADMINISTRATOR)

A. COMPLIANCE DETERMINATION

☐ This project IS in compliance with the Flood Plain Overlay District requirements, subject to any conditions attached to and made part of this application.

☐ This project IS NOT in compliance with the Flood Plain Overlay District requirements. No permits shall be issued until the project comes into compliance.

_____

Floodplain Administrator (signature) (PRINTED name) (Date)

The Applicant is reminded that this document is a determination of compliance with the Flood Plain Overlay District design requirements only. All construction permits, inspections, and submission of final documents must be completed and approved before a Certificate of Occupancy will be issued, and before the development can be occupied or used.

APPROVAL

☐ Approved ☐ Approved as Noted ☐ Not Approved Resubmit with Changes

Print Name _____ Title _____

Signature _____ Date _____

blair

IMAGE ELEMENTS™

REV #: C

GIANT EAGLE

GNE
Address: 42847 Penn Avenue
Pittsburgh, PA 15222

Date: 02-28-2019
Blair #: 87240 | File Name: AD-GNE87240-C

COLOR SPECIFICATIONS

	PMS 186C RED
	WHITE
	PMS 877C SILVER
	BLACK
	PMS 123C YELLOW
	PMS 361C GREEN

These drawings are not for construction. The information contained herein is intended to express design intent only.
This original design is the sole property of Blair Companies. It cannot be reproduced, copied or exhibited, in whole or part, without first obtaining written consent from Blair Companies.

blair
IMAGE ELEMENTS
5107 Kissell Ave.
Altoona, PA 16601
P: 814.949.8287
F: 814.949.8293
blaircompanies.com

PROJECT INFORMATION

CLIENT
Giant Eagle
ADDRESS
2647 Penn Avenue
Pittsburgh, PA 15222
NUMBER
87240
DATE
08-30-19
RENDERED
RD
FILE NAME
AD-GNE87240
CATEGORY
APPROVAL

REVISION

a. 09.17.19.RD; Add Sq. ft table and all dimensions to elevation
b. 02.28.20.KD; Update logo size
c. 03.02.20.EBD. Update Sq Ft Add detail for channel letters

Drawing will expire 90 days after date on cover. If production request is sent in after 90 days, 24 hours is required to review approval.

2017 nec

CUSTOMER INITIALS

Initials

SCOPE OF WORK

SCOPE OF WORK - INCLUDED	
MID	N/A
BUILDING	1. CHANNEL LETTERS
PARKING LOT SIGNS	N/A

SCOPE OF WORK - NOT INCLUDED	
MID	N/A
BUILDING	N/A
PARKING LOT SIGNS	N/A

Current Brand Revision: _____

☐ All provided image elements and or services meet the current brand standard revision

☐ The following image elements and or services do not meet the current brand standard revision due to municipal code and or specific site conditions. _____

These drawings are not for construction. The information contained herein is intended to express design intent only.
This original design is the sole property of Blair Companies. It cannot be reproduced, copied or exhibited, in whole or part, without first obtaining written consent from Blair Companies.

blair
IMAGE ELEMENTS
5107 Kissell Ave.
Altoona, PA 16601
P: 814.949.8287
F: 814.949.8293
blaircompanies.com

PROJECT INFORMATION

CLIENT
Giant Eagle
ADDRESS
2847 Penn Avenue
Pittsburgh, PA 15222
M NUMBER
87240
DATE
08-30-19
RENDERED
RD
FILE NAME
AD-GNE87240
CATEGORY
APPROVAL

REVISION

a. 09.17.19.RD: Add Sq. ft table and all dimensions to elevation
b. 02.28.20.KD: Update logo size
c. 03.02.20.EBD: Update Sq Ft Add detail for channel letters

Drawing will expire 90 days after date on cover. If production request is sent in after 90 days 24 hours is required to review approval.

2017 nec

CUSTOMER INITIALS

Initials

S-7

SOUTH ELEVATION

Note: The birds are shown white during the day but have the ability to light different colors at night with different colored internal LED's. The giant eagle letters will always remain red, day and night.

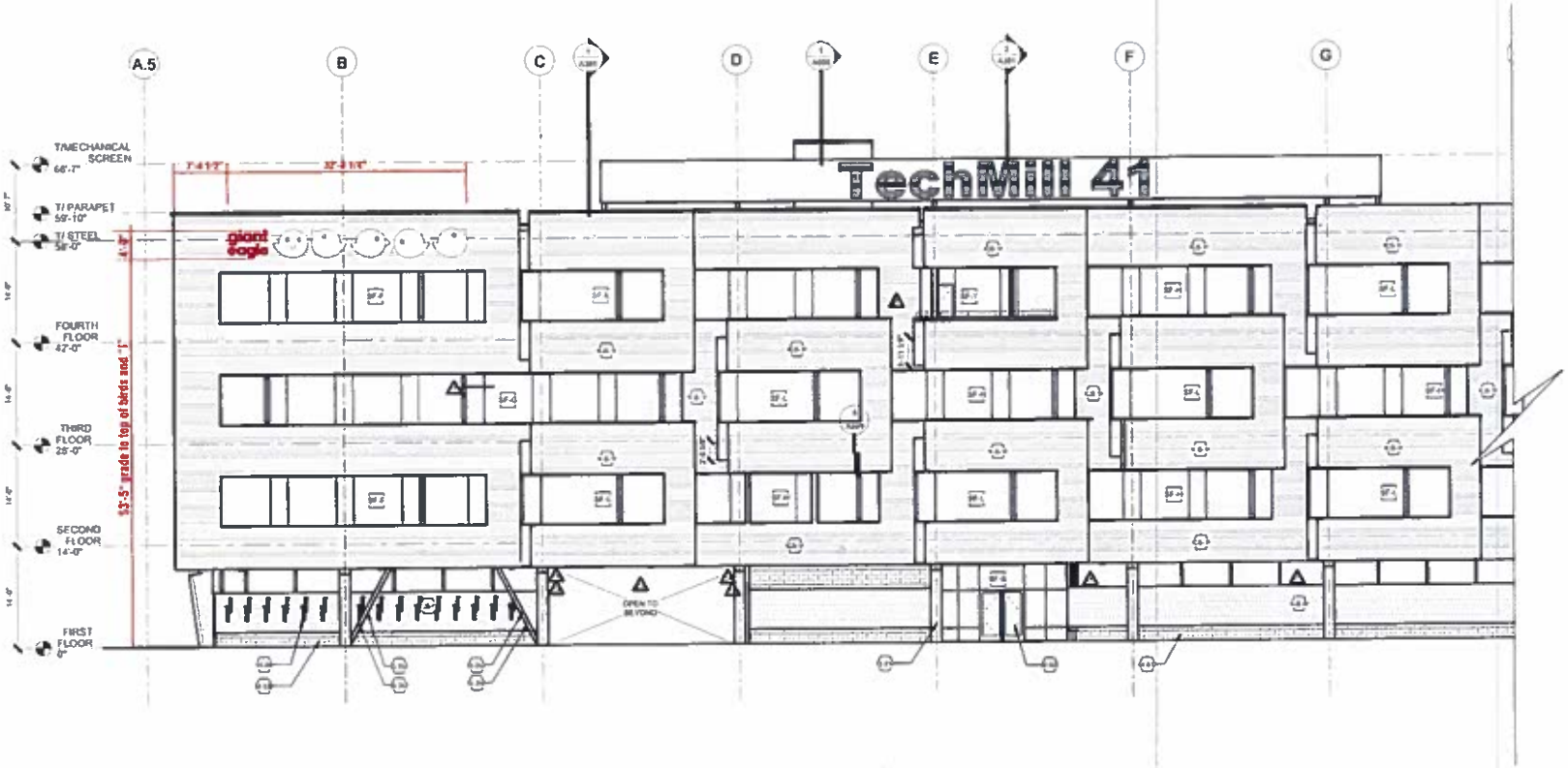

SOUTH ELEVATION
SCALE: 1"=240"

These drawings are not for construction. The information contained herein is intended to express design intent only.
This original design is the sole property of Blair Companies. It cannot be reproduced, copied or exhibited, in whole or part, without first obtaining written consent from Blair Companies.

blair
IMAGE ELEMENTS
5107 Kissell Ave.
Altoona, PA 16601
P: 814.949.8287
F: 814.949.8293
blaircompanies.com

PROJECT INFORMATION

CLIENT
Giant Eagle
ADDRESS
2847 Penn Avenue
Pittsburgh, PA 15222
NUMBER
87240
DATE
08-30-19
RENDERED
RD
FILE NAME
AD-GNE87240
CATEGORY
APPROVAL

REVISION

a. 09.17.19;RD; Add Sq. ft table and all dimensions to elevation
b. 02.28.20;KD; Update logo size
c. 03.02.20;EBD; Update Sq Ft Add detail for channel letters

Drawing will expire 90 days after date on cover. If production request is sent in after 90 days, 24 hours is required to receive approval.

2017 nec

CUSTOMER INITIALS

Initials

S-7

CHANNEL LETTERS

QTY: 1

SQ FT TOTAL (GIANT EAGLE) : 22.3
SQ FT TOTAL (BIRDS) : 106.7

OVERALL SQ FT TOTAL: 129

PROJECTION OF FLUSH-MOUNTED CHANNEL LETTERS FROM WALL: 8 3/8"
LIGHTING TO BE RGB LED'S (COLOR CHANGING)

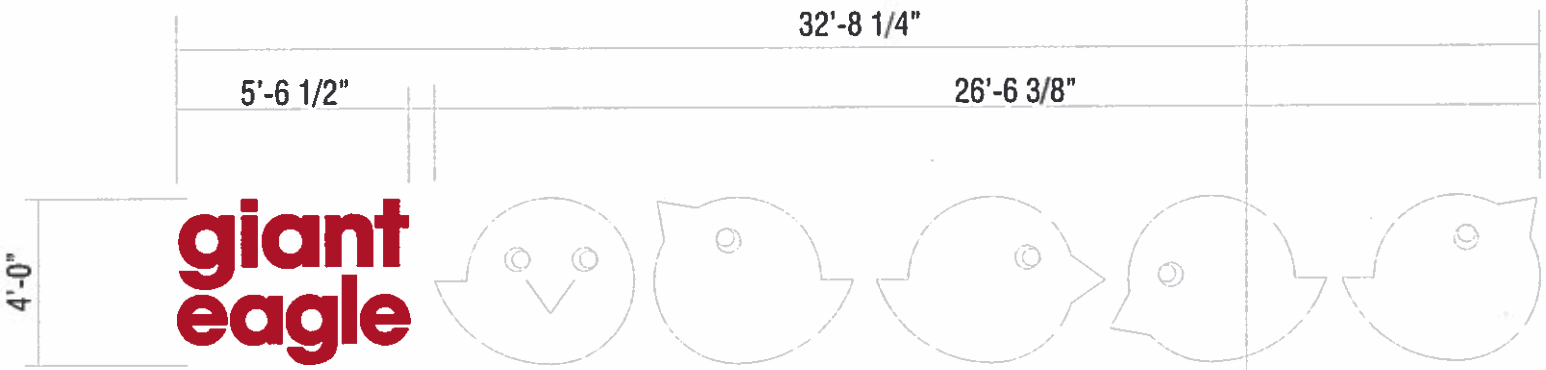

CUSTOM LOGO & CHANNEL LETTER SET

SCALE: 3/16"=1'-0"

blair
IMAGE ELEMENTS
5107 Kissell Ave.
Altoona, PA 16601
P: 814.949.8287
F: 814.949.8293
blaircompanies.com

PROJECT INFORMATION

CLIENT
Giant Eagle
ADDRESS
2847 Penn Avenue
Pittsburgh, PA 15222
JOB NUMBER
87240
DATE
08-30-19
REFERENCE
RD
FILE NAME
AD-GNE87240
CATEGORY
APPROVAL

REVISION

a. 09.17.19,RD; Add Sq. ft table and all dimensions to elevation
b. 02.28.20,KD; Update logo size
c. 03.02.20,EBD; Update Sq Ft Add detail for channel letters

Drawing will expire 90 days after date on stamp. If production request is sent in after 90 days 24 hours is required to review approval

2017 nec

CUSTOMER INITIALS

Initials

S-7 CHANNEL LETTER DETAIL

QTY: 1

PROJECTION OF FLUSH-MOUNTED CHANNEL LETTERS FROM WALL: 8 3/8"

CUSTOM LOGO & CHANNEL LETTER SET

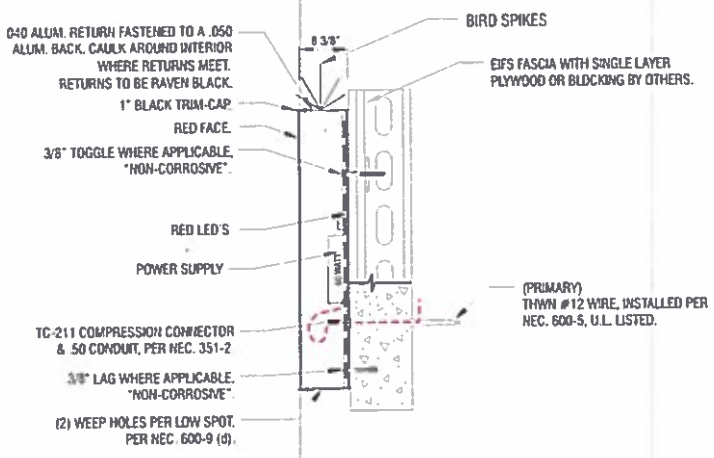

SECTION DETAIL

NOT TO SCALE

SCOPE OF WORK

1. INSTALL NEW CHANNEL LETTERS

blair IMAGE ELEMENTS

5107 Kissell Ave.
Altoona, PA 16601

P: 814.949.8287

F: 814.949.8293

blaircompanies.com

PROJECT INFORMATION

CLIENT: Giant Eagle

ADDRESS: 2847 Penn Avenue Pittsburgh, PA 15222

JOB NUMBER: 87240

DATE: 08-30-19

RENDERED: RD

FILE NAME: AD-GNE87240

CATEGORY: APPROVAL

REVISION

a. 09.17.19,RD: Add Sq. ft table and all dimensions to elevation
b. 02.28.20,KD: Update logo size
c. 03.02.20 EBD: Update Sq Ft Add detail for channel letters

Drawing will expire 90 days after date on cover. If production request is sent in after 90 days 24 hours is required to review approval

2017 nec

CUSTOMER INITIALS

Initials

S-7 CHANNEL LETTER DETAIL

QTY: 1

PROJECTION OF FLUSH-MOUNTED CHANNEL LETTERS FROM WALL: 8 3/8"
LIGHTING TO BE RGB LED'S (COLOR CHANGING)

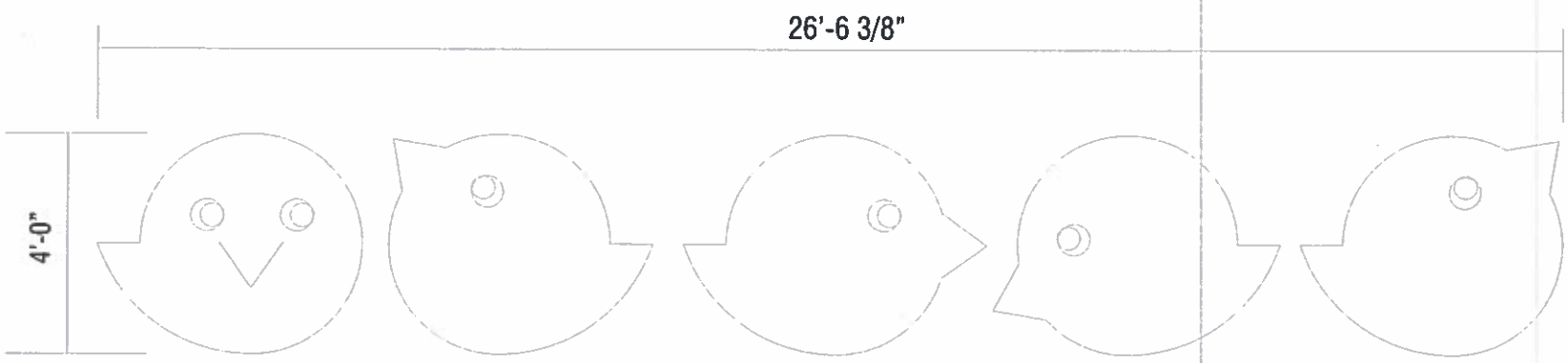

CUSTOM CHANNEL LETTER SET

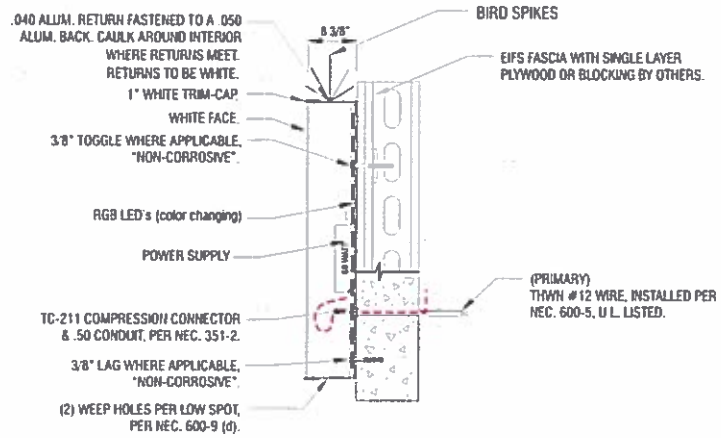

SECTION DETAIL

NOT TO SCALE

SCOPE OF WORK

1. INSTALL NEW CHANNEL LETTERS

blair
IMAGE ELEMENTS
5107 Kissell Ave.
Altoona, PA 16601
P: 814.949.8287
F: 814.949.8293
blaircompanies.com

PROJECT INFORMATION

CLIENT: Giant Eagle
ADDRESS: 2847 Penn Avenue Pittsburgh, PA 15222
M NUMBER: 87240
DATE: 08-30-19
RENDERED: RD
FILE NAME: AD-GME87240
CATEGORY: APPROVAL

REVISION

a. 09.17.19.RD; Add Sq. ft table and all dimensions to elevation
b. 02.28.20.KD; Update logo size
c. 03.02.20.EBD: Update Sq Ft Add detail for channel letters

Drawing will expire 90 days after date on cover. If production request is sent in after 90 days, 24 hours is required to review approval

2017 nec

CUSTOMER INITIALS

Initials

INSTALLATION EXAMPLES

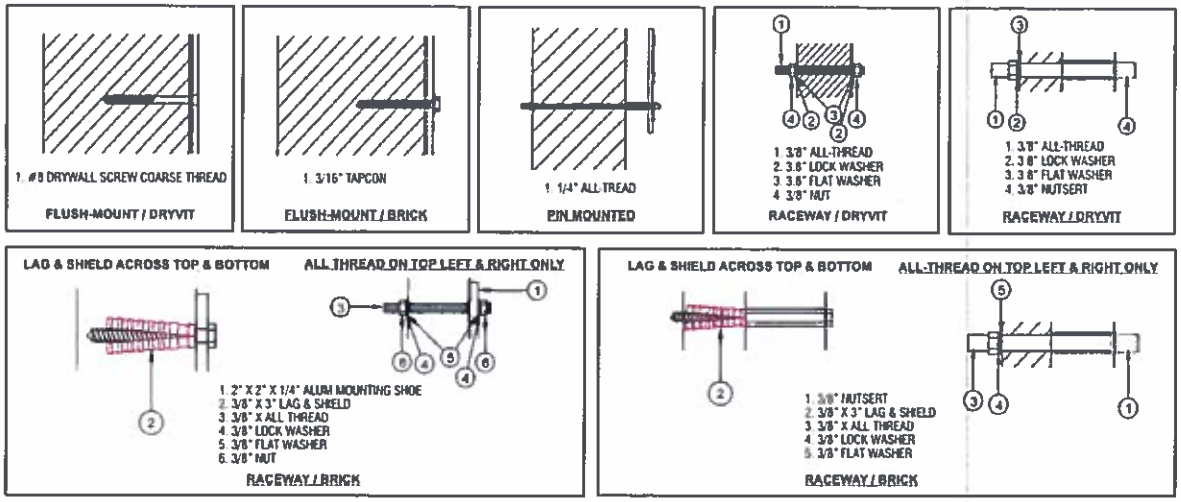

MOUNTING NOTE:
To be used with either masonry mounting systems or toggle bolt system for hollow walls as required electrical primary pass thru the wall into J-box in the sign.

INSTALLER NOTE:
When sealing ALL penetrations use a polyurethane sealant that is ASTMC-920 compliant. An example and approved product would be Loctite PL Premium.

SAFETY CRITERIA

All employees are recommended to possess a valid API certification, follow the established guidelines set forth by API as well as follow any local, state, or federal laws.

- Perform a Pre-Task Job Safety Analysis
- Understand how and where to obtain First-Aid and Medical treatment, including CPR.
- Use the proper level of PPE per the assigned task.
- Only use tools that are in safe working order before using them.
- Always use tools for their intended purpose and never over their safe working limit.
- Employees operating vehicles must conform to all DOT requirements as well as API regulations.
- Use proper fall arrest equipment.
- Understand the requirements for working at height on a job site.
- Properly barricaded the work area from the public in accordance with Section 8 of the API guidelines.
- Only competent and trained people using approved equipment in a manner in accordance with Section 10 of the API guidelines should perform lifting duties.
- Follow all approved lock-out tag-out policies when de-energizing equipment.

- **Examples of Equipment Include:** Personal Protective Equipment, Barricade, Crane, Hoist, Bucket Truck, Scissor Lift, Ladder, Vinyl Applicators (Squeegee or Application Liquid), Welder/Torch and Hand Tools/Power Tools

blair
IMAGE ELEMENTS
5107 Kissell Ave.
Altoona, PA 16601
P: 814.949.8287
F: 814.949.8293
blaircompanies.com

PROJECT INFORMATION

CLIENT
Giant Eagle
ADDRESS
2847 Penn Avenue
Pittsburgh, PA 15222
QUOTE NUMBER
87240
DATE
08-30-19
REPORTED
RD
FILE NAME
AD-GNE87240
CATEGORY
APPROVAL

REVISION

a. 09.17.19,RD; Add Sq. ft table and all dimensions to elevation
b. 02.28.20,KD; Update logo size
c. 03.02.20,EBD. Update Sq Ft Add detail for channel letters

Drawing will expire 90 days after date on cover. If production request is sent in after 90 days, 24 hours is required to review approval

UL 2017 nec

CUSTOMER INITIALS

Initials